Optical Multicast Overlay and Survivable Architectures in High Speed Multi-Wavelength Optical Access Networks

QIU, Yang

A Thesis Submitted in Partial Fulfillment

of the Requirements for the Degree of

Doctor of Philosophy

in

Information Engineering

The Chinese University of Hong Kong

July 2011

Acknowledgement

First and foremost, I would like to express my deepest gratitude to my thesis supervisor, Prof. Chun-Kit Chan, for his persistent support and inspirational guidance in my postgraduate research work. He not only taught me the research methodology and experimental skills, but also provided me innovative discussions, which inspired many research ideas eventually in this thesis. He has in-depth knowledge and creative thinking in optical communications. His sincerity and persistence in research will always inspire me in my future research work. I would also like to thank Prof. Lian-Kuan Chen for his continuous support and guidance.

It is my pleasure to have a chance to work alongside many talented postgraduate students in Lightwave Communications Laboratory in the Department of Information Engineering. I have learnt much from them and shared a nice experience of research with them. I would like to send sincere thanks to Dr. Ning Deng, Dr. Li Ming, Mr. Jordan Tse, Mr. Yin Zhang, Mr. Zhenchang Xie, Mr. Shuqiang Zhang, Mr. Kin Man Chong, Mr. Jing Xu, Mr. Kin Man Chong, Mr. TSE Kam-Hon, Mr. JIA Wei, Miss LI Pulan, Mr. LIU Zhixin, Mr. YUEN Piu-hung, Mr. Luk Hon-tong, and Mr. Wang Qike.

Last but not the least; I am deeply indebted to my families for their long-term support, tolerance and encouragement. This thesis is dedicated to them.

Abstract

Nowadays, broadband applications, such as interactive video and multimedia services, have further increased the demand of bandwidth, and thus make high speed multi-wavelength optical access network highly desirable. Wavelength division multiplexing passive optical network (WDM-PON) is a promising candidate to realize the next generation optical access networks due to its dedicated bandwidth for each subscriber and more flexible bandwidth management. As the network traffic is becoming more data-centric, more networking capabilities are required to provide the data service in a more flexible and reliable way. In this thesis, we have proposed and investigated several interesting optical multicast overlay schemes and network protection architectures for WDM-PONs. Optical multicast overlay technique can support the additional multicast transmission on the existing point-to-point data services, while network protection architectures can assure network availability with short traffic restoration time. We will briefly discuss our work in the following sub-topics.

Optical multicast overlay in WDM-PON: Traditional WDM-PONs support only two-way point-to-point data transmission between the optical line terminal (OLT) and the individual subscribers, via the respective designated set of wavelengths. To enhance the network flexibility, it is more desirable to support various different modes of data or video delivery such as broadcast and multicast, in addition to point-to-point transmissions. In this thesis, we systematically investigate the problems and propose our several feasible schemes to overlay multicast transmission onto the existing point-to-point traffic in a WDM-PON. In the first approach, the control of the multicast transmission is achieved by a simple polarization-assisted scheme at the

OLT. By the cross-use of wavelengths, a separate path is provided for the multicast differential phase shift keying (DPSK) data from downstream point-to-point amplitude shift keying (ASK) data without additional light sources, which guarantees the transmission performances in both directions, since the upstream ASK signal is imposed on the multicast DPSK signal. We have also demonstrated its variant, in which an optical switch replaces the polarization-assisted control for multicast transmission. The second approach is based on the optical carrier suppression (OCS) technique at the OLT so as to generate the optical subcarriers or sidebands for multicast ASK data modulation. The downstream unicast data is modulated in DPSK format, which will be re-modulated with the upstream ASK data at the respective optical network unit (ONU). As the downstream unicast signal and the upstream signal are carried on different fiber feeders, while the upstream signal and the multicast signal are carried on different subcarriers, though on the same fiber feeder, the possible Rayleigh backscattering effect is much alleviated. In the third scheme, by using subcarrier modulation technique, we have first successfully overlaid two independent multicast data streams simultaneously onto a WDM-PON, which is believed to further enhance the network capability for multiple destination traffic and improve the cost effectiveness for the future network. Finally, we will provide a comprehensive comparison on all the proposed schemes in this topic.

Survivable network architectures for WDM-PONs: A survivable WDM-PON architecture which can provide self-protection is attractive to avoid enormous loss in data and business due to fiber cuts. To facilitate the network management, the protection switching is realized at the OLT. In this thesis, a simple centrally controlled survivable WDM-PON architecture employing OCS technique is proposed. Protection switching at the OLT employs electrical switches to control the clock signal for the protection sub-carrier generation, via optical carrier suppression. Both distribution and feeder fibers are protected simultaneously. By employing inverse-RZ (IRZ) format for the downstream transmission and non-return-to-zero (NRZ) for the upstream re-modulated signal, the optical network units are kept colorless and simple. On the other hand, wavelength division multiplexing/time division multiplexing (WDM/TDM) hybrid network, which combines TDM technology and WDM technology, can further increase the network reach, transmission capacity, and reduces the cost per subscriber. Although the bandwidth per subscriber in a WDM/TDM PON is less than that in a WDM-PON, it is still considered as a smooth migration from TDM-PON to WDM-PON. In this thesis, we have proposed a novel WDM/TDM PON architecture which can provide self-protection using a ring topology to connect the subscribers. Finally, we will provide a comprehensive comparison on all the proposed schemes in this topic.

摘要

近年來，像交互式視頻這樣的寬帶服務增長了對網絡帶寬的需求，而高速多波長光接入網絡技術為這樣的需求增長提供了一種有效地解決方案。波分復用無緣光網絡（WDM-PON）由於其為用戶提供獨享式帶寬和更靈活的帶寬管理，使其成爲其中一種很具發展前景的光接入網絡結構。由於網絡傳輸以數據傳輸為核心，這就要求網絡有更強的網際能力，以增強數據服務的靈活性和可靠性。本文提出並研究了多種支援多播數據傳輸和具有保護功能的 WDM-PON 網絡結構。光多播技術可以在支援單播傳輸的基礎上支援組播數據傳輸，網絡保護結構可以確保網絡的連通性。我們將在下面介紹這兩种技術。

WDM-PON 中支援多播的光接入技術：傳統的 WDM-PON 結構僅僅支持光終端（OLT）到用戶之間的點到點的單播數據傳輸。爲了增強網絡的靈活性，希望在並在繼承了其單播傳輸特性的基礎上，也支援其他形式的數據或視頻傳輸，例如點到多點的多播或廣播類型的數據傳輸。本文將系統地分析在 WDM-PON 網絡中的光多播問題，並在保留其單播特性的基礎上，提出了多種新型的光多播解決方案。第一种光多播通過在 OLT 中控制光的極性來實現。由於波長的交叉使用，采用差分頻移鍵控碼（DPSK）的多播數據和采用振幅鍵控（ASK）的單播數據在不同的綫路上傳輸，從而保證了兩者的傳輸質量。同時，上行的 ASK 信號被加載到下行的 DPSK 多播信號之上，由於兩种信號的正交特性，上下行之間的影響也被降到了最小。我們同時演示了這種的結構的一種變換：在 OLT 中用光開關取代基於光極性的控制。第二种方案通過光載波抑制技術（OCS）產生了用於傳輸 ASK 多播信號的負載波。由於下行的單播信號和上行的信號在不同的光纖鏈路上傳輸，而下行的多播信號和上行信號在不同的負載波上傳輸，大大減弱了可能發生的 Rayleigh 后向散射效應。由於副載波調製技術的使用，我們的第三种方案，可以同時支援兩路相互獨立的光多播數據。這種在 WDM-PON 中可以同時

支援兩路相互獨立的光多播數據的方案，可以進一步增強網絡的網際能力，並且降低網絡的運營成本。最後，本文將綜合地分析和比較在本節中提到的一些光多播解決方案。

具有自恢復功能的 WDM-PON 網絡結構：一個有自我保護功能的可存活的 WDM-PON 網絡結構，可以在網絡出現斷路時避免數據的損失。爲了管理和控制的方便，用於自我保護恢復的開關應該位于 OLT。本文提出了基於 OCS 技術的可集中控制的一種自恢復的 WDM-PON 網絡結構。自保護通過 OLT 中的由電開關控制的一個時鐘信號實現。當時鈡開啓時，用於自保護的副載波將會產生。這種結構可以同時饋綫和配綫部分的光纖。通過在下行傳輸中采用反性歸零碼 (IRZ)，在上行傳輸中采用非歸零碼 (NRZ)，光網絡單元(ONUs)沒有使用額外的光源，從而使整個結構更加簡單。另一方面，結合了波分復用和時分復用技術的基於波分復用和時分復用的混合型無源光網（WDM/TDM PON）可以擴展網絡範圍，提高網絡容量，並降低用戶成本，儘管單位用戶的網絡帶寬相對于 WDM-PON 減少了。本文提出了一個基於環結構的可實現自我保護的 WDM/TDM PON 網絡結構，並且通過實驗驗證了其快速的自我恢復功能。最後，本文將綜合地分析和比較在本節中提到的一些提供保護功能解決方案。

Table of Contents

Table of Figures

Chapter 1
Introduction

1.1 High speed optical access networks

In the current Information Age, optical communication has played an important role in the telecommunication networks, because it can transmit ultrahigh speed data over extremely long distance, due to the broad bandwidth and low transmission attenuation provided by optical fibers. A typical telecommunication network can be divided into three parts [1]: long-haul transport networks, metropolitan area networks and access networks. The long-haul transport networks, also known as backbone networks, usually span thousands of kilometers connecting major network hubs in different countries across different continents. Optical fibers have been the dominant media to support such long distance and high speed transmission systems. Metropolitan area networks, serving as feeder networks between the access networks and the long-haul networks, usually cover a range from 10-km to 100-km, which adopt a circuit-based synchronous optical network (SONET)/synchronous digital hierarchy (SDH) as its major technique to provide a high-speed data transmission. Access networks, covering a range of only tens of kilometers (0 – 20-km), provide connections for end users. They have to deliver the end-user data and applications to a large number of subscribers. This thesis will focus on access networks.

Access network, which is also called "first-mile network", connects service providers at central offices to the end subscribers. With the rapidly increasing bandwidth demand mainly driven by the development of advanced broadband multimedia application, such as video-on-demand (VoD), interactive high-definition digital television (HDTV) and video conference, novel broadband access network solutions that provide high capacity is highly desirable to satisfy these IP-based services. Several technologies including digital subscriber line (DSL), hybrid fiber coax (HFC), Wi-Fi, Fiber to the home (FTTH), have been proposed to solve the bandwidth bottleneck existing in access networks. Given the cost-sensitivity of access networks, the copper wire based access network technologies, such as DSL schemes, are currently the predominant access network solutions. However, they are not considered as future-proof solutions, because these copper wire based infrastructures have been approaching their own fundamental speed limitation. For instance, the most recent DSL [2] scheme, very-high-bit-rate DSL, version 2 (VDSL2) permits the transmission of asymmetric and symmetric aggregate data rates up to 200 Mbit/s but with severe distance limitations shorter than ~300 meters. Thus, it can not always accommodate the future bandwidth demand imposed by the broadband services such as high-definition television (HDTV). On the contrary, optical access networks, which used to be abandoned in 1980s due to their immature technology and prohibitively high costs, have again been discussed and considered as a promising solution, since the deployment cost has been steadily reduced thanks to the remarkable progress of photonic and fiber-optic components in recent years. Fiber based optical access network can deliver extremely high bandwidth over a distance beyond 20 km and meet the requirements of current and predicted future voice, data and video services. Passive optical network (PON) is viewed as an attractive solution to realize optical access networks, because they are capable of very high speed transmission with a distance as long as 20 km. Furthermore, the cost of the network deployment and maintenance can be effectively reduced because they employ only passive optical components in outside plants.

1.2 PON architecture

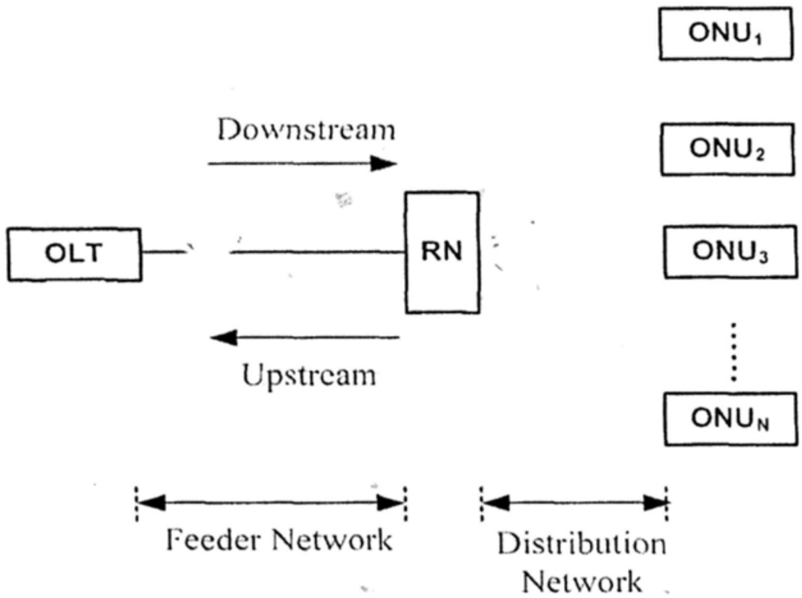

Fig. 1.1 The architecture of a passive optical network

Fig. 1.1 is a typical architecture of passive optical network (PON), which comprises of three main network components: the optical line terminal (OLT), the remote node (RN), and the optical network unit (ONU). In a PON, the OLT located at the network operator's premises, delivers the downstream data to the RN via a long fiber link, named as feeder fiber. The downstream data are then de-multiplexed at the RN, before destined to the ONUs located at end user premises, via pairs of shorter fiber links named distribution fibers. At the ONU, the downstream data is received by users, while the upstream data, such as users' request information will be forwarded to the OLT after being collected and multiplexed at the RN. Because the RN is shared by all ONUs in the network and the required fiber length is much less than the case of direct connections between ONUs and the OLT, the network deployment cost is significantly reduced [1]. Besides, in a PON, the network between the OLT and the ONUs are passive, i.e., it contains only passive network components without any power-supply components, such as electronic amplifiers or regenerators. This reduces the deployment difficulty and enhances the maintenance convenience. Moreover, the network can benefit the network operators to allow easy upgrade to higher speeds, since upgrade has to be done only at the network operator's central office, where the relevant active components are hosted. However, since the PON is a point-to-multipoint network, mechanisms to control the shared media access for end subscribers may be needed, in order to avoid any collision in transmissions. According to different mechanisms used in PONs to control the shared media access, PONs can be sub-divided into several types. Time-division-multiplexed PONs (TDM-PONs) and wavelength-division-multiplexed PONs (WDM-PONs) are two most popular and representative PON technologies employed nowadays.

1.2.1 TDM-PONs

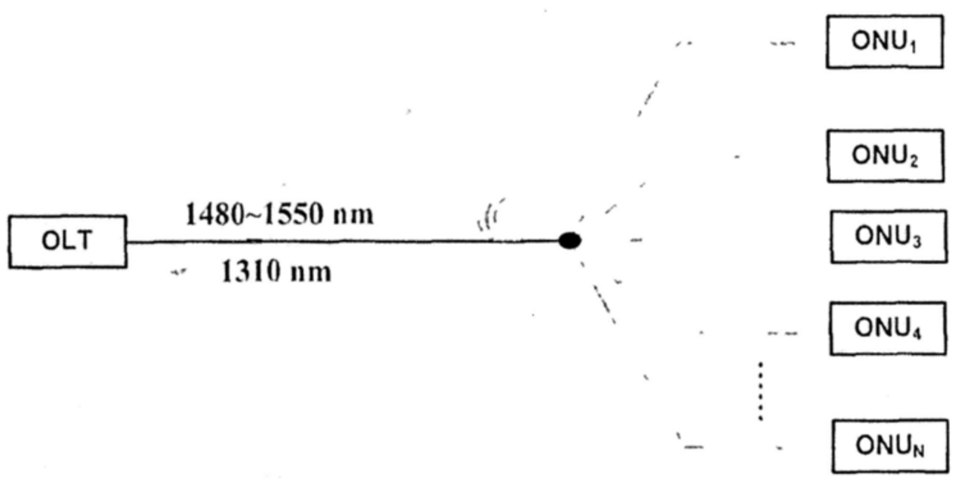

Fig. 1.2 The architecture of a TDM-PON

When time-division-multiplexing technology is adopted in a PON to control the shared media access, the network is known as a time-division multiplexed PON (TDM-PON) or power splitting PON (PS-PON) [3], whose architecture is shown in Fig. 1.2 [4]. In a TDM-PON, downstream and upstream data are carried on different optical carriers, i.e. 1480nm ~ 1550 nm for downstream and 1310 nm for upstream, to avoid their interference and both the downstream and the upstream carriers are time-shared among all ONUs by time division multiplexing technique. The downstream data are power-split into multiple replicas via a tree splitter at the RN, before being broadcast to all ONUs. At each ONU, the desired downstream signal can be filtered out by its designated time slots. In the upstream transmission, in order to avoid data transmission collision, only one ONU is permitted to transmit data at one time in its allocated time intervals. The way to allocate or schedule the time intervals between all the ONUs is known as a point-to-multipoint media access control (MAC) protocol, which is necessary in a typical TDM-PON.

Time-division-multiplexing based schemes are now the preferred solutions for PON networks, because each ONU is allowed to transmit data in the allocated time slots dictated by the OLT. This lowers the relevant costs as only a single upstream wavelength is needed and a universal type of ONU can be deployed in every site. There are currently three main TDM-PON schemes, including Broadband PON (BPON) [5], Ethernet PON (EPON) [6], and Gigabit PON (GPON) [7], which have been standardized and deployed by network operators for access network applications. The latest version of BPON provides speeds up to 1244 Mbps and 622 Mbps for downstream and upstream respectively, while GPON can provide a symmetric downstream/upstream data rate up to 2488 Mbps, compared with EPON which are working towards a bit rate up to 10 Gb/s recently. All the three standards employ TDM technology to share the transmission bandwidth among all ONUs. The power splitter used at the RN limits the number of ONUs that a TDM-PON can support due to the power budget as well as the shared bandwidth. In order to avoid any possible collision at the RN in upstream data transmission among different ONUs, bandwidth has to be allocated among ONUs utilizing TDM technology, which needs media access control (MAC) protocol to assign different ONUs with different time intervals for transmission, known as dynamic bandwidth allocation (DBA) [8]. There is also another problem about the security in such a network architecture, since the downstream data are always broadcasted to all ONUs which may leak some sensitive information to others, such as your banking accounts. Therefore, an extra encryption mechanism is needed. Moreover, the variation in transmission distance between each ONU and the OLT may cause the variation in signal power as well as phase alignment of received upstream signals at the OLT, which requires upstream traffic synchronization. Besides, burst mode receivers are necessary at the OLT to adapt their gain according to the received peak intensity so as to recover the clock and phase of the received upstream signals. 10G-PON, also known as XG-PON [9], was proposed as the next generation 10G standard compatible with GPON using new wavelength bands. Although it can provide higher speed than a conventional GPON with improved transmission security and power saving, its 10G capacity is shared by all the users connected to the same PON. Therefore, it still has bandwidth limitation for single subscriber and suffers from the problems in a typical TDM-PON.

The limitations and problems existing in a TDM-PON can be alleviated by introducing wavelength division multiplexing technology (WDM) into PONs, which used to be considered a high-cost solution. However, with the ever-increasing bandwidth demand in access network and the availability of low cost optical components thanks to the development of photonic and fiber-optic components and mass production process, the wavelength division multiplexed PON (WDM-PON) has recently attracted much attention from both researchers and service providers.

1.2.2 WDM-PONs

Fig. 1.3 demonstrates typical architecture of a WDM-PON [10-12], which has been viewed as a promising solution for PONs to bring truly enormous bandwidth to the end subscribers by fully utilizing fiber transmission capability.

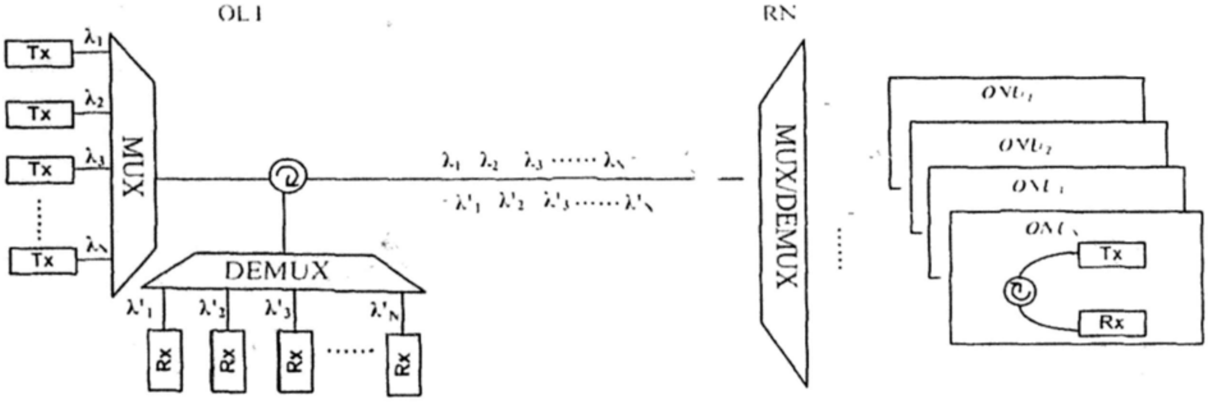

Fig. 1.3 The architecture of a WDM-PON

In a TDM-PON, upstream and downstream transmissions use only one wavelength for each directional transmission, whose bandwidth is inherently shared among all end users. However, in a WDM-PON, each ONU uses separate dedicated wavelengths to communicate with the OLT. It has a similar architecture with TDM-PON, except that a WDM multiplexer or de-multiplexer replaces the power splitter at the RN. The WDM multiplexer or de-multiplexer usually made of an array waveguide grating (AWG) [13] or thin-film filter, routes different wavelengths to their destined ONUs. At each ONU, the downstream data carried on the destined downstream wavelength are detected, while the upstream data are modulated onto the designated upstream wavelength before being transmitted back to the OLT, via the RN. Since the connection between the OLT and an ONU is realized by a set of dedicated wavelengths, a WDM-PON is inherently a point-to-point network and requires no point-to-multipoint MAC. Moreover, there is no sharing of bandwidth among the

ONUs, which enhances the privacy and independence of the ONUs. Because of the independence and privacy of an ONU, the data rates for the wavelengths can be different, leading to the flexible bandwidth scalability for each ONU, for different kinds of services.

Since the a WDM-PON can provide a "unlimited" bandwidth although with expensive ONUs, many leading network operators or service providers in the world, such as *NTT* in Japan [14], *Verizon* [15] and *SBC* [16] in USA have paid a lot of attention to the deployment of WDM-PONs. Meanwhile, many novel technologies have been utilized in the WDM-PON system, such as "colorless" ONUs [17], advanced modulation formats [18], multicast overlay [19] and survivable architectures [20]. With the development of all these novel technologies, a more flexible and scalable WDM-PON system supporting longer distance, higher bit-rate with much reduced cost can be expected in the foreseeable future.

1.3 The challenges to enrich the networking capability of WDM-PONs

With the development of Internet based application, such as IPTV and video conference, a large amount of data are transmitted through the access network, which not only requires broadband transmission but also a flexible and reliable transmission to enrich its networking capability. Traditional WDM-PONs support only point-to-point transmissions between the OLT and ONUs by employing dedicated wavelength for each ONU. Therefore, a basic WDM-PON suffers from the sole data delivery mode and limits the networking capability when different modes of data or video delivery such as broadcast and multicast are necessary to cope with more diverse multimedia and data services available for broadband access. Moreover, the point-to-multipoint tree architecture further limits the networking capability since it has limited protection feature, which may cause enormous loss of data or even business during any failure of component or fiber.

1.4 Major contributions of this thesis

As mentioned above, a traditional WDM-PON is currently faced with the challenge to increase its networking capability which comes from its sole point-to-point data delivering mode and the lack of protection mechanism. This thesis will cover two technologies to enrich the networking capability, including optical multicast overlay and network protection architecture. Optical multicast overlay technique can support the additional multicast transmission on the existing point-to-point data services, while network protection architectures can assure network availability with short traffic restoration time.

1.4.1 Optical multicast overlay in WDM-PONs

Multicast technology employed in a WDM-PON can significantly enhance the networking capability by providing additional multicast transmission on the existing point-to-point data services, which improves the resource utilization efficiency for multiple destination traffic and improves the cost effectiveness. Optical multicast can be realized by establishing one-to-many light paths on the optical layer, and thus reduces the loading of the electronic network processors or routers on the network layer and achieves much higher processing speed. In order to realize optical multicast overlay on a WDM-PON, two crucial features have to be carefully designed, namely how to overlay the multicast traffic to the existing network infrastructure which is carrying the two-way point-to-point traffic, as well as the overlay control technique for connection reconfiguration. In this thesis, we have proposed our three feasible schemes to overlay multicast transmission onto the existing point-to-point traffic in a WDM-PON.

In the first approach, the control of the multicast transmission is achieved by a simple polarization-assisted scheme at the OLT. By the cross-use of wavelengths, a separate path is provided for the multicast differential phase shift keying (DPSK) data from downstream point-to-point amplitude shift keying (ASK) data without additional light sources, which guarantees the transmission performances in both directions, since the upstream ASK signal is imposed on the multicast DPSK signal. We have also demonstrated its variant, in which an optical switch replaces the polarization-assisted control for multicast transmission.

The second approach is based on the optical carrier suppression (OCS) technique at the OLT so as to generate the optical subcarriers or sidebands for multicast ASK data modulation. The downstream unicast data is modulated in DPSK format, which will be re-modulated with the upstream ASK data at the respective optical network unit (ONU). As the downstream unicast signal and the upstream signal are carried on different fiber feeders, while the upstream signal and the multicast signal are carried on different subcarriers, though on the same fiber feeder, the possible Rayleigh backscattering effect is much alleviated.

In the third scheme, by using subcarrier modulation technique, we have first successfully overlaid two independent multicast data streams simultaneously onto a WDM-PON, which is believed to further enhance the network capability for multiple destination traffic and improve the cost effectiveness for the future network. The control of the multicast transmissions is achieved by controlling the clock signal for optical tone generation as well as an optical switch at the OLT.

1.4.2 Survivable network architecture for WDM-PONs

A survivable WDM-PON architecture which can provide self-protection is attractive to avoid enormous loss in data and business due to fiber cuts, which is another technology apart from multicast to enhance the networking capability discussed in this thesis. To facilitate the network management, the restoration switch used for self protection is realized at the OLT.

We have proposed and investigated a simple, centrally-controlled, survivable WDM-PON architecture with colorless ONUs. The proposed protection switching mechanism is based on alternate path routing of optical subcarriers generated by means of applying OCS technique to the light source in each transmitter at the OLT. No additional dedicated light source for protection switching is needed. Only electronic switches, instead of optical ones, are required at the OLT to trigger the control clock signal in the OCS process, thus guaranteeing a fast traffic restoration time. Both the distribution and feeder fibers are protected against the possible fiber cut failure. Besides, by employing inverse-RZ (IRZ) format for the downstream transmission and non-return-to-zero (NRZ) data for the upstream re-modulation, the ONUs remain colorless and simple.

On the other hand, wavelength division multiplexing/time division multiplexing (WDM/TDM) hybrid network, which combines TDM technology and WDM technology, can further increase the network reach, transmission capacity, and reduces the cost per subscriber. Although the bandwidth per subscriber in a WDM/TDM PON is less than that in a WDM-PON, it is still considered as a smooth migration from TDM-PON to WDM-PON. In this thesis, we have proposed a novel WDM/TDM PON architecture which can provide self-protection using a ring topology to connect the subscribers, which can successfully protect both the distribution and feeder parts of the network with a fast recovering time.

1.5 Outline of this thesis

The organization of the remaining chapters of this thesis will be as follows:

Chapter 2 reviews the typical architectures and novel technologies employed for WDM PONs.

Chapter 3 reviews previously proposed multicast enabled WDM-PON architectures and proposes our novel optical multicast overlays in WDM-PONs. The operation principles are explained and experiments are demonstrated.

Chapter 4 first reviews several survivable architectures for WDM-PONs. After that, we proposed a novel survivable architecture for WDM-PONs using optical carrier suppression and another survivable for WDM/TDM PONs. The experiments for both architectures are demonstrated to verify their fast recovering time.

Chapter 5 gives a summary of this thesis and suggests possible future work.

Chapter 2
WDM-PONs

2.1 Introduction

Recently, TDM-PON schemes, such as BPON, EPON, and GPON, have been standardized and deployed by network operators for broadband access network applications including video, data and voice. However, TDM-PONs have a multipoint-to-point (MP2P) connection between ONUs and the OLT and the bandwidth is shared among ONUs, which not only limits the transmission capacity for per ONU but also causes the problems of security and requires burst mode receivers. In order to break the bandwidth limitation provided for per subscriber and to alleviate the problems existing in TDM-PONs, wavelength division multiplexing technology was introduced into PONs, known as WDM-PONs, in which each ONU uses dedicated separate wavelengths to communicate with the OLT. The connection between the OLT and an ONU is realized by a set of dedicated wavelengths, implying a WDM-PON is a point-to-point network, which requires no sharing of bandwidth among the ONUs. Thus large transmission capacity can be provided to a single ONU with enhanced privacy and independence, since the bandwidth resource of a single wavelength is no longer shared and can be dedicated to specific ONU. In addition, good scalability of the bandwidth is shown for each ONU, since the data rates for different wavelengths can be different, which can be employed to support different kinds of services in nowadays network applications. Therefore WDM-PONs have regarded as a promising approach to deliver high speed services to both business and residential subscribers and attracts much attention in recent years. In this chapter, we will review the architectures for WDM-PONs as well as some employed enabling technologies for the network.

2.2 WDM-PON architectures

Several WDM-PON architectures were proposed by incorporating wavelength dependent devices in the conventional PON systems based on tree topology The earliest tree-shaped WDM PON was known as the passive photonic loop (PPL) [21-22], as shown in Fig 2 1

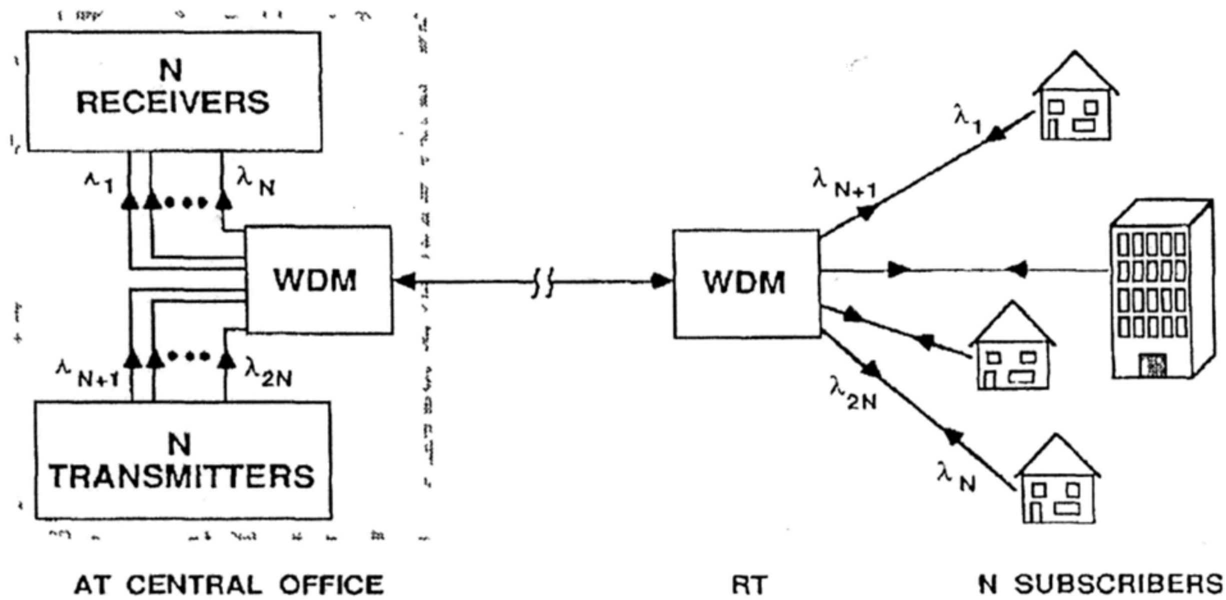

Fig 2 1 The Passive Photonic Loop architecture providing independent, two-way transmission for N subscribers [21]

In the architecture accommodating N subscribers or ONUs, 2xN different wavelengths were employed to construct 2xN independent transmission links between the OLT and subscribers, both in downstream and upstream transmissions, say λ_i, λ_{i+N} for the upstream and downstream transmission of subscriber#i respectively The N downstream wavelengths (λ_{N+1} λ_{2N}) were collected at wavelength division multiplexer at the central office before being delivered to the remote node, which routed the wavelengths to the destined subscribers The upstream wavelengths (λ_1 λ_N) were destined to the central office via the transmission links In this way, the two-way transmission between the OLT and each subscriber was realized on only one piece of feeder fiber and one piece of distribution fiber. However, totally 2xN different wavelengths were required when only N subscribers were supported, which lowered the resources utilization efficiency and increased the cost of the scheme.

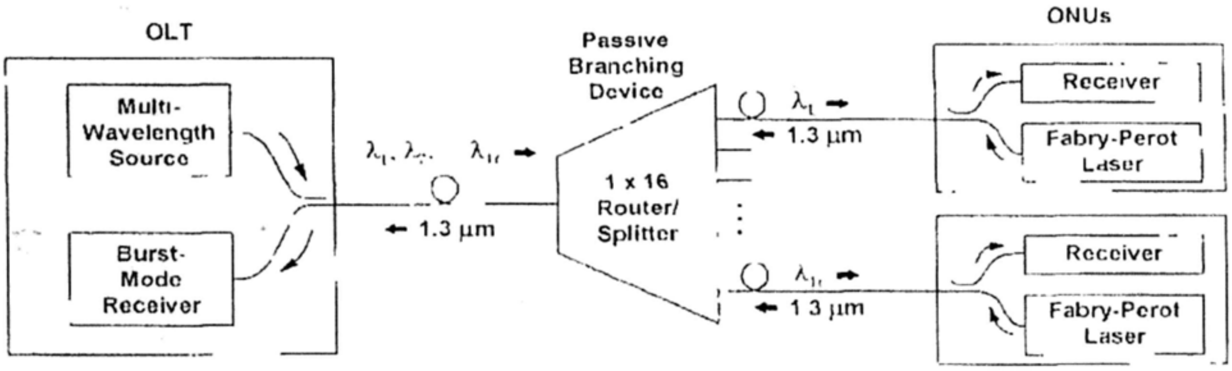

Fig. 2.2 Schematic of a single-fiber CPON [23]

In order to increase the bandwidth utilization efficiency in PPL, a WDM-PON called composite PON (CPON) was proposed in [23-24] as shown in Fig. 2.2. In the system, WDM technique was employed for the downstream traffic in the 1550 nm band, while a single wavelength in the 1300 nm band was shared by the upstream traffic via TDM technique. At the RN, both a WDM demultiplexer and a power splitter were needed to route the downstream wavelengths and combine the upstream data respectively. By using TDM for the upstream traffic, only (N+1) wavelengths were needed to support N ONUs, but TDM required MAC protocol for upstream transmission and burst mode receivers at the OLT.

The local access router network (LARNET) was proposed to work about the limitation brought by TDM in the CPON [25] as shown in Fig. 2.3. Instead of using a single wavelength in the uplink for all ONUs, a broadband light source (BLS), e.g. light-emitting diode (LED), was employed at an ONU. The BLS, carrying the upstream data, was fed into the waveguide grating router (WGR) at the RN, where its spectrum would be sliced and selected. Therefore, different ONUs would have different wavelength components to carry the upstream data after the RN, although they had the same BLS at the ONUs. TDM technique was no longer necessary for the upstream transmission in the LARNET. Moreover, the low cost of BLS, such as edging-emitting LEDs, can reduce the cost of the ONU.

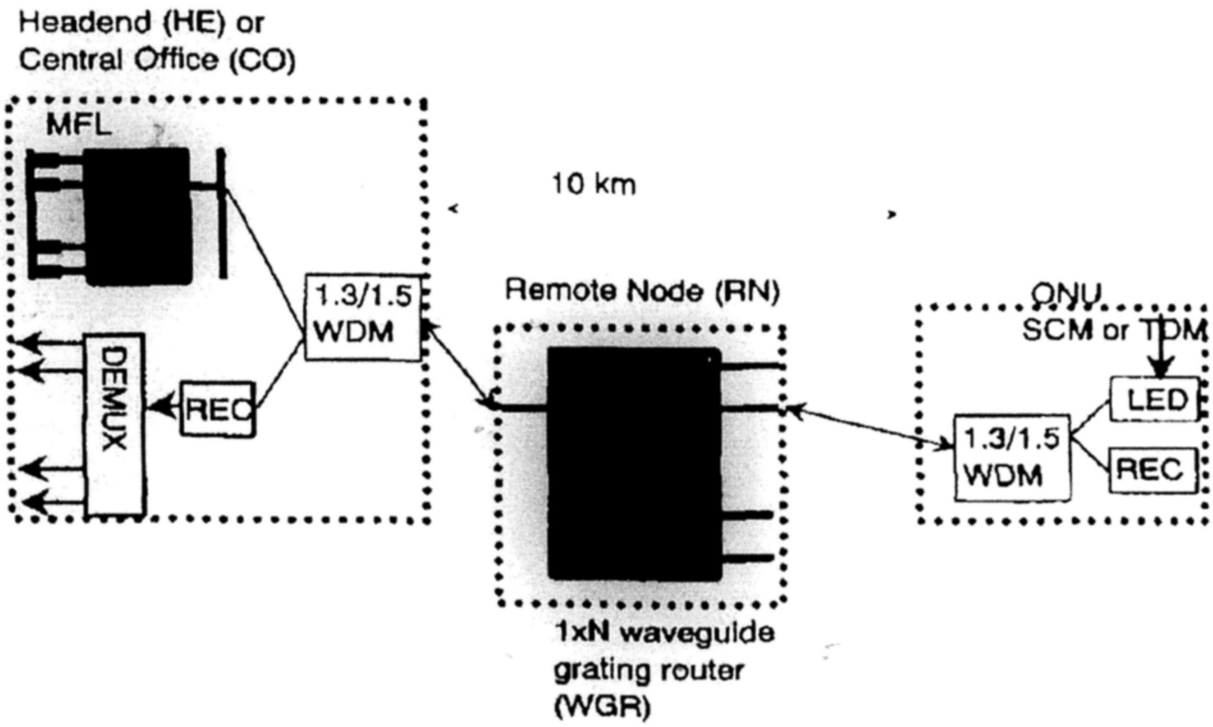

Fig. 2.3 Schematic of architecture of LARNET with N wavelength channels [25]

Another architecture called remote interrogate of terminal network (RITENET), which was similar to the LARNET, was proposed to avoid transmitters at the ONU by remodulating the downstream wavelength for upstream transmission [26]. At the ONU, part of the downstream power was used for data reception, while the rest unmodulated power was modulated by the upstream data and sent back to the OLT. At the OLT, a tunable laser and a tunable receiver were used for all ONU channels, which required TDM both for upstream and downstream traffic. When an array of transmitters and receivers replaced the tunable components as in [27], TDM technique was needed neither in uplink nor downlink. However, two different fiber links were necessary to separate the upstream and downstream transmissions on the same wavelength channel.

In order to increase the scalability of the network to support more ONUs, a multistage AWG-based WDM-PON was proposed in [28]. By exploiting the periodic routing property of the AWG, a given wavelength could be reused by more than one ONU. The architecture had good scalability to accommodate more ONUs either by employing more wavelengths at the OLT or cascading more stages of AWGs. Fig. 2.4 has shown an example of multistage AWG-based WDM PON supporting 32 ONUs using 16 wavelength values, generated by two laser sources.

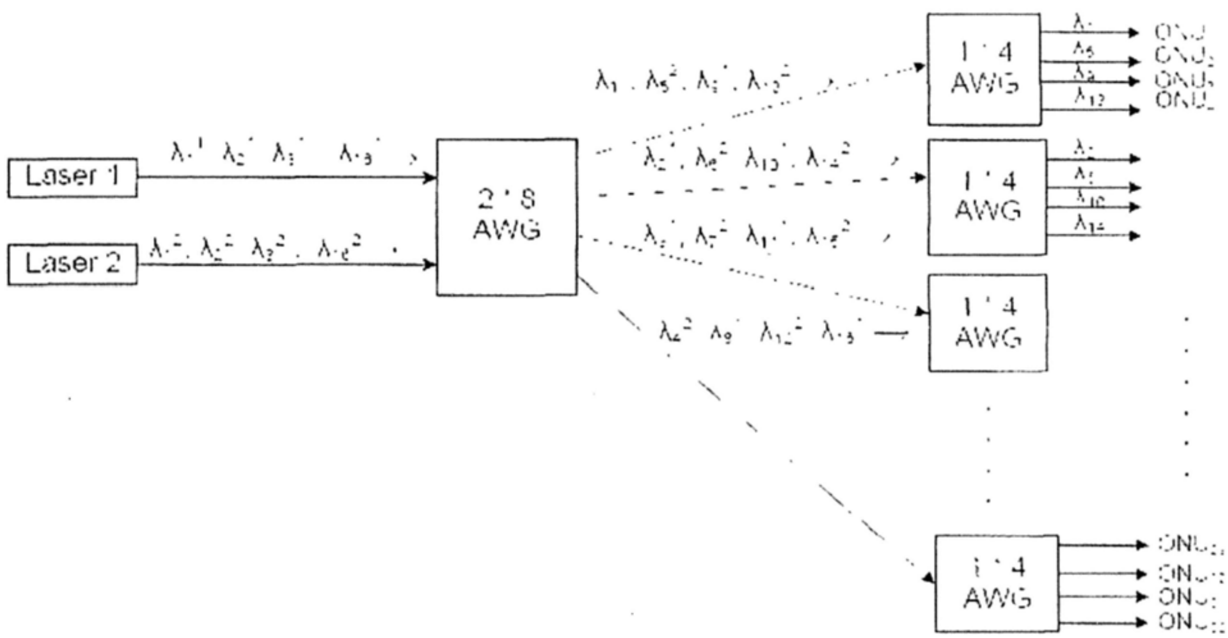

Fig. 2.4 An example of a multistage AWG-based WDM-PON with 32 ONUs [28]

Besides the architectures employing tree topology, WDM-PONs can also be constructed in ring topology. Fig. 2.5 shows a WDM network featuring shared virtual rings, in which a network node (NN) and multiple access nodes (ANs) are connected into a form of ring [29]. In the architecture, the network node sent out multiple wavelength channels to the ANs. At an AN, the pre-assigned wavelength channel was selected via the Waveguide Grating Router (WGR) both for downstream data detection and upstream data remodulation. Due to the WGR used at the AN, an AN could support multiple end stations attached to it either in a star topology when employing different wavelengths for different end stations or in a sub-ring topology when a single wavelength was shared among end stations via TDM technique.

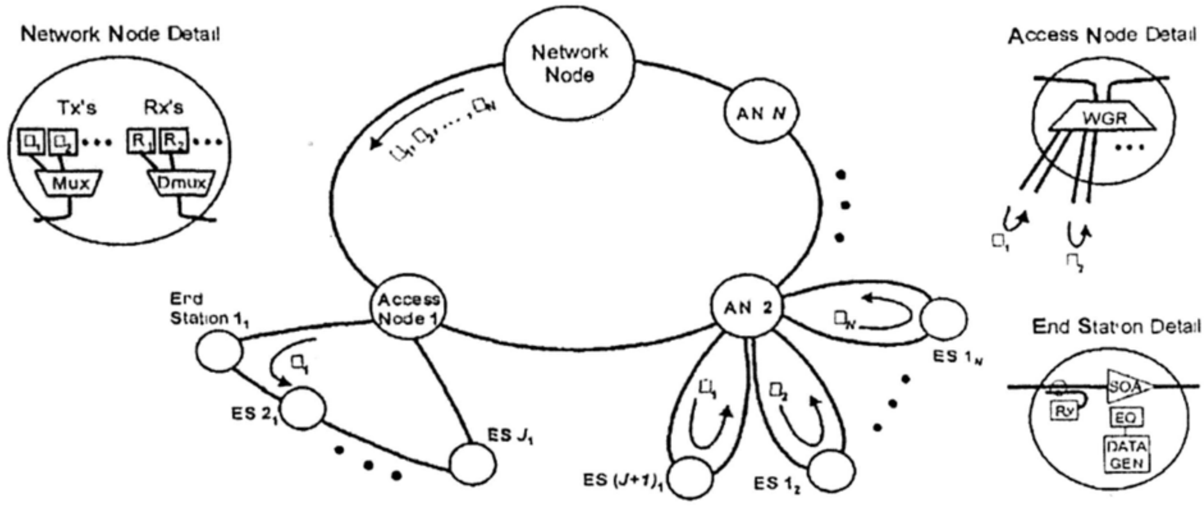

Fig. 2.5 The architecture of a WDM network featuring shared virtual rings [29]

Although a WDM-PON has been considered a promising solution for broadband optical access network, the number of the supported ONU is limited by the available wavelengths even in a dense WDM-PON, and the cost for per subscriber is also high as it can not be shared by other subscribers, which has hindered its application in an access network. Moreover, one subscriber may not need the whole tens of Gb/s bandwidth of a single wavelength for most of present access applications. Therefore, a PON combining WDM and TDM technologies to optimize network performance and resource utilization, known as WDM/TDM hybrid PON, has attracted more and more attention nowadays. In a typical WDM/TDM PON, a number of wavelengths are deployed and each wavelength can be shared among a group of ONUs or subscribers via TDM technique instead of allocated to a single ONU. Thus, a WDM/TDM hybrid network can increase the network capacity by enlarging the number of subscribers a single wavelength can accommodate, while keeping the cost per subscriber much lower than that in a traditional WDM-PON, since the cost for a single wavelength transmission can be shared among a group of ONUs or subscribers. Besides, the WDM/TDM hybrid PON also increases the resources utilization efficiency by allocating the wanted bandwidth to other subscribers. In this way, WDM/TDM hybrid PON has been considered as a smooth and economical migration from TDM-PON to WDM-PON by offering large network capacity with a low cost per subscriber and attracted much attention recently.

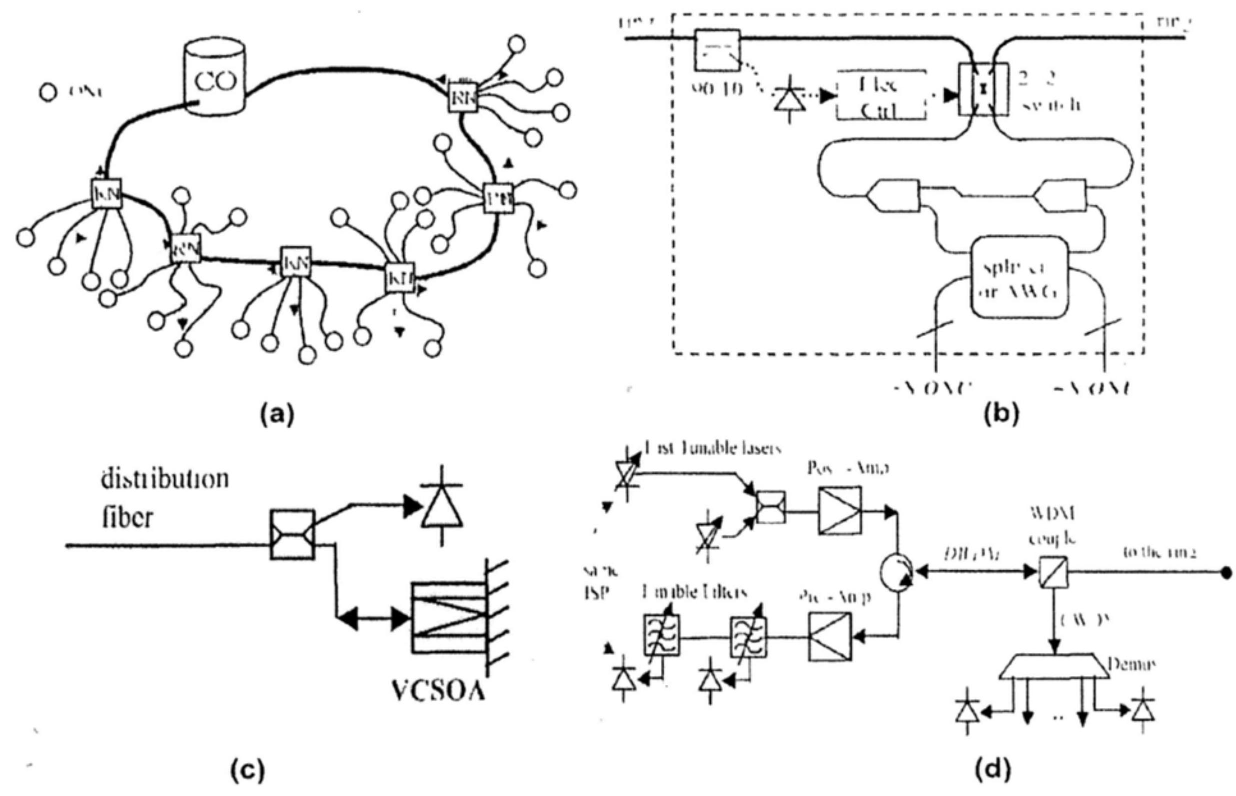

Fig. 2.6 Schematic diagram of SUCCESS [30]. (a) Architecture and topology. (b) Design schematics of remote node with capability of protection and restoration. (c) Design of ONU with Polarization-insensitive VCSOA is used for its better coupling to fiber and higher degree of system integration. (d) Design of transceivers at OLT.

A WDM/TDM hybrid optical access network based on a collector ring and distribution star networks, named as SUCCESS, was proposed in [30] to support both existing TDM-PONs and WDM-PONs, which is shown in Fig. 2.6. In the SUCCESS, a collector ring connects the OLT and all the remote nodes (RNs), which were served as the star centers for ONUs, and kept a point-to-point connection to the OLT in logic, since no wavelength was reused on the ring. The RN had passive optical splitter or AWG as well as a 2x2 optical switch in it, as shown in Fig. 2.6(b). When there was a passive splitter in the RN, one dedicated wavelength on DWDM grid was used to broadcast the downstream data for the attached ONUs, which had Fabry-Perot (FP) lasers for upstream data on CWDM grids. On the other hand, if an AWG in the RN, each ONU had its own dedicated wavelength on a DWDM grid to communicate with OLT. The optical 2x2 switch in the RN could provide a better protection and restoration capability. When a fiber cut occurred in the ring, the power loss of the downstream would trigger the 2x2 optical switches embedded in the affected RNs, and the state change of the switches could restore the transmission of the RNs by flipping its orientation. In order to reduce the cost of network deployment and management by relax the stringent specification of the stability of the upstream wavelength, a possible configuration of ONU, demonstrated in Fig. 2.6(c), employed vertical cavity semiconductor optical amplifiers (VCSOAs), which had easy on-wafer testing and lower polarization dependence [31], [32] as well as a gain of more than 10 dB. Fig. 2-6(d) has shown the basic structure of the OLT, in which a WDM coupler was used to separate the upstream CWDM channels from DWDM channels. The separated upstream traffic could then be demultiplexed by a CWDM demultiplexer made by thin-film filters, while the DWDM channels employed fast tunable lasers and tunable filters to minimize transceiver counts and eased some operations of IPS. This ring-star based architecture kept backward compatibility for TDM-PONs with an upgrade to new DWDM-PONs. The transceiver account could be reduced by using tunable lasers and receivers at the OLT, which were shared by all ONUs in the network. Besides, the fast tunable lasers generated downstream data traffic as well as upstream data transmission for DWDM-PON ONUs.

2.3 Novel technologies employed in a WDM-PON

In order to increase the cost efficiency and networking capability in the network, several novel technologies are employed in a WDM-PON, including colorless ONUs, virtual private network, optical multicast and survivable architecture design for protection.

2.3.1 Colorless ONUs

The simplest way to achieve the upstream transmission in a WDM-PON is to employ wavelength-specific ONUs or colored ONUs, which means the lasers incorporated in different ONUs have different working wavelengths for the upstream traffic. However, these colored ONUs greatly increase the cost of deployment, administration and maintenance, as wavelength-specific source is needed and wavelength alignment is required at each ONU. Therefore much research efforts have been focused on how to realize colorless ONUs in a WDM-PON in order to lower the cost of the network by standardizing ONUs with one specification. Incorporating a tunable laser in an ONU is a simple way to realize colorless ONUs, but the key challenge exists in how to reduce the cost of a wavelength-tunable laser source to be commercially available for access network applications. Some low-cost wavelength-tunable transceivers have been proposed in [33-34]. Spectrum-slicing is another typical way to realize colorless ONUs, in which the centralized broadband light source at the OLT, is spectrally-sliced at the RN before being distributed to each ONU as upstream carriers for data modulation. In such schemes, no light sources are required at the ONUs, but only one cost effective broadband light source is needed for upstream transmission instead, which can be LED [17, 35-38], Fabry-Perot (FP) laser [37], or supercontinuum-based broadband light source [17]. However the centralized broadband light source usually have limited system performance due to its incoherent nature. In order to improve the system performance, injection-locking and wavelength seeding schemes have been proposed, in which Fabry-Perot (FP) laser diodes [38-39], reflective semiconductor optical amplifiers (R-SOA) [40-43] or vertical-cavity surface-emitting laser (VCSEL) [44] were employed at the ONUs and injected by the spectrum-sliced seeding wavelengths from a broadband light source based on the amplified spontaneous emission (ASE) at the OLT. However, the data rates of such schemes were limited to around 1.25 Gb/s. The remodulation schemes proposed in [45-47] was another approach to realize colorless ONUs, and could provide higher data rates for upstream traffic. In such architectures, the downstream data carried on the dedicated downstream wavelengths were delivered to their destined ONUs, at which the downstream power was split into two parts. One part was used for downstream data reception, while the other part was used as the light source for the upstream transmission and remodulated by the upstream data via an optical modulator. Since the downstream carrier was reused for upstream transmission, the downstream data should be erased at the upstream transmitter so as not to affect the upstream traffic. The downstream data could be erased from upstream transmission either by pre-coding upstream data with downstream data [45] or utilizing the orthogonalities between different modulation formats, such as OOK versus DPSK [46], OOK versus FSK [47], OOK versus inverse-RZ [48], and DPSK versus dark (inverse)-RZ [49]

2.3.2 Virtual private network

WDM-PONs can realize high speed point-to-point transmissions between the OLT and the ONUs, but it has not considered any private communication between ONUs without relayed by the OLT. Virtual private network (VPN) is a network service overlaid on other networks to provide a group of subscribers in different sites with private and secure communications. Therefore an optical VPN in WDM-PON, which realizes all-optical inter-connections among ONUs, is highly desirable, because it can greatly increase the networking capability and reduce the transmission latency by enabling inter communications among ONUs. Some feasible schemes were proposed to overlay all optical VPN onto a WDM, either by employing AWG [50-53], RSOA [54], DPSK modulation format [55] or OCS-DPSK modulation format [56].

2.3.3 Optical multicast

WDM-PONs support two-way point-to-point data transmission between the OLT and the individual subscribers, via the respective designated set of wavelengths. However, with more diverse multimedia and data services available for broadband access, the access network has to be flexible enough to cope with various different modes of data or video delivery such as broadcast and multicast, in addition to point-to-point transmissions. Hence, the same data or video service can be delivered to a designated subset of subscribers or ONUs, and the connections can also be flexibly reconfigured at the OLT. Multicast transmission in a WDM-PON significantly enhances the network resource utilization efficiency for multiple destination traffic and improves the networking capability. Optical multicast can be realized by establishing one-to-many lightpaths on the optical layer, and thus reduces the loading of the electronic network processors or routers on the network layer and achieves much higher processing speed. Several interesting schemes have been proposed to overlay optical multicast onto a WDM-PON, either by using additional light sources

[57], subcarrier multiplexing technique [58-60], or the characteristics of specific modulation formats [61-63].

2.3.4 Survivable architectures for traffic protection

WDM-PON is an attractive solution to realize optical broadband access. However, the PON architecture employed in a WDM-PON limits its protection characteristics. In order to avoid enormous loss in data and business due to any possible fiber cuts, survivable network architecture is highly desirable. The survivable architecture can be designed into a tree topology and utilize group protection mechanism [64-68] or the cycling property of an AWG [69-71] for traffic protection. Besides, ring structure is also considered when designing survivable architectures for WDM-PONs [72-79], since a ring structure can provide a good property of protection by duplicating protection fibers to offer redundant paths, and locating path protection switching at both the CO and the subscribers.

In this thesis, we will focus on the optical multicast realizing and survivable architecture design in WDM PONs which can enrich the networking capability of the network. In chapter 3, we will introduce our optical multicast overlay schemes either by controlling the polarization and the optical power of the downstream multicast data, or by optical carrier suppression to generate subcarriers for multicast traffic. In chapter 4, we will introduce our survivable WDM-PON architecture, which is simple and centrally-controlled, with colorless ONUs by employing optical carrier suppression technique. Besides, we will also propose a survivable architecture for WDM/TDM hybrid PON employing ring topology to connect end users in chapter 4.

Chapter 3
Optical multicast overlays in WDM-PONs

3.1 Introduction

WDM-PON is regarded as a promising approach to deliver high speed services to both business and residential subscribers. Common WDM-PONs support two-way point-to-point data transmission between the OLT and the individual subscribers, via the respective designated set of wavelengths. However, with more diverse multimedia and data services available for broadband access, the access network has to be flexible enough to cope with various different modes of data or video delivery such as broadcast and multicast, in addition to point-to-point transmissions to enrich the networking capability.

Broadcast transmission in a WDM-PON [80] increases the networking capability by delivering copies of information to all subscribers without the requirements of the subscribers. Thus service providers may have to use much bandwidth resource to deliver unnecessary information to certain customers and some sensitive information may be leaked to others. On the contrary, in a multicast transmission [57] the same data or video service can be delivered to a designated subset of subscribers or ONUs, and the connections can also be flexibly reconfigured at the OLT, which significantly enhances the network resource utilization efficiency for multiple destination traffic and improves the cost effectiveness while keeping the security of information within the designated subset of subscribers or ONUs.

Multicast transmission in a WDM-PON can be realized in an electrical method, but loading the electronic network processors or routers on the networking layer and the processing bandwidth of electronic components will limit the processing speed. Therefore, optical multicast realized by establishing one-to-many light paths on the optical layer, which can achieve much higher processing speed by reducing the loading of the electronic network components, is very attractive In order to realize optical multicast overlay on a WDM-PON, two crucial features have to be carefully designed, namely how to overlay the multicast traffic to the existing network infrastructure which is carrying the two-way point-to-point traffic, as well as the overlay control technique for connection reconfiguration

In this chapter, we will first review several typical schemes proposed to optically overlay the multicast data onto the existing point-to-point or unicast wavelengths in WDM-PONs Then we will propose our own schemes to overlay multicast onto a WDM-PON 1) A WDM-PON with polarization-assisted multicast overlay control and its variant, 2) An optical multicast overlay scheme using optical sub-carriers for WDM-PONs, 3) Optical overlay of two independent multicast streams on a WDM-PON Finally, we will provide a comprehensive comparison on all the proposed schemes in this topic

3.2 Previous WDM-PON architectures with multicast capability

Several interesting schemes [57-63] have been proposed to optically overlay the multicast data onto the existing point-to-point or unicast wavelengths in WDM-PONs, using various feasible and practical optical signal processing techniques The common principle is to selectively enable or disable the broadcast service superimposed on each downstream wavelength at the OLT, such that only the designated subset of ONUs can properly retrieve the broadcast service But the mechanisms to overlay the multicast signal onto the existing point-to-point architecture or the realizations of the additional multicast function can be quite different, according to which we have sorted the previous schemes into three categories overlay scheme based on additional light sources [57], overlay schemes utilizing subcarrier multiplexing [58-60], overlay schemes using the characteristics of specific modulation formats [61-63]

3.2.1 Overlay scheme based on additional light sources

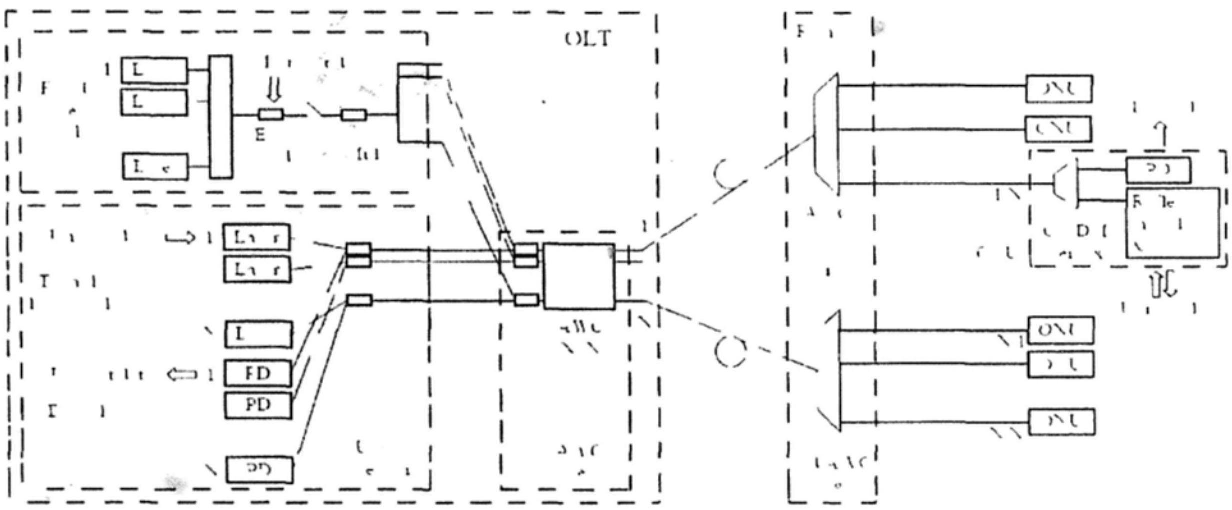

Fig 3 1 A multicast enabled architecture based on additional light sources [57]

Fig 3 1 shows a WDM/TDM PON architecture with multicast capability based on additional light sources [57], in which WDM was used for traffic routing and TDM for tunable laser sharing A fixed laser stack composed of N fixed lasers was utilized for multicast data transmission, while a tunable laser source shared among ONUs based on time division multiplexing performed unicast data transmission Multicast and unicast traffic could be simultaneously wavelength multiplexed using the free spectral range (FSR) periodicity of the two stages of AWGs Since there was no light generation in ONUs, the ONU was kept colorless and simple The tunable laser used here could reduce the system cost and allowed dynamic bandwidth allocation, as time slots could be dynamically assigned depending on the transmission requirements

However, additional light sources would incur high cost for both subscribers and operators. Subcarrier multiplexing technology could overlay multicast data transmission onto a typical WDM-PON system without additional light sources.

3.2.2 Overlay schemes utilizing subcarrier multiplexing

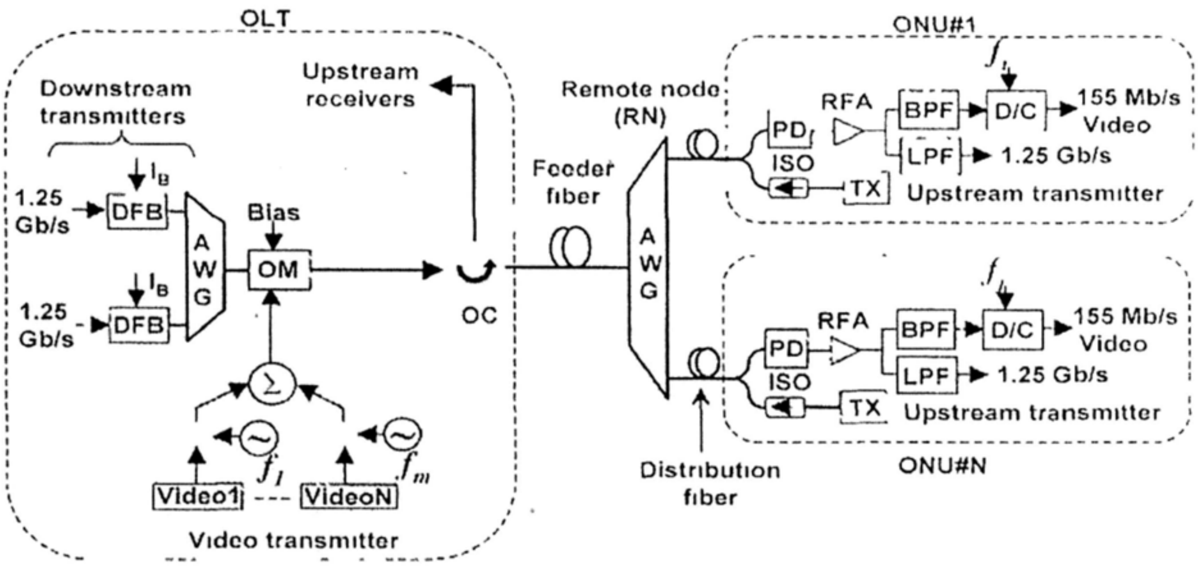

Fig. 3.2 Multicast enabled system utilizing subcarrier multiplexing [58]

Fig. 3.2 shows a WDM-PON architecture with multicast capability using subcarrier multiplexing technology [58]. In this scheme, a set of directly-modulated distributed feedback (DFB) lasers located at the OLT carried the downstream point-to-point (unicast) NRZ-ASK signals, while the subcarrier multiplexed (SCM) downstream multicast BPSK video signals generated by a common radio frequency (RF) video transmitter were superimposed onto the unicast channels, via an optical modulator (OM), e.g., Mach–Zehnder modulator (MZM). All downstream channels from the OLT were fed into a feeder fiber before being delivered to the dedicated ONUs. At the ONU, the combined multicast SCM BPSK signal and the unicast NRZ-ASK signal were converted into electrical signals, via a wide-band photo detector, before being separated by different electrical filters. The multicast control was realized by changing the bias current of DFBs in order to control the extinction ratio (ER) of the unicast NRZ-ASK signal, so that the multicast subcarrier signals could be enabled when the ER was low or disabled when the ER was high. In this scheme, no additional optical light sources were needed and the multicast control was centralized at the OLT, which reduced the system cost and management difficulty. However, light sources were needed for the upstream transmission which made ONUs complex and colored. Also the transmission capacity was limited since it provides only 1.25 Gbp/s for unicast transmission and 155 Mbp/s for multicast transmission. Moreover, several dedicated electronic devices, including subcarrier modulation module, local frequency synthesizer, and RF combiner were required at the transceivers to modulate and demodulate the subcarrier signals, which dramatically increased the system complexity.

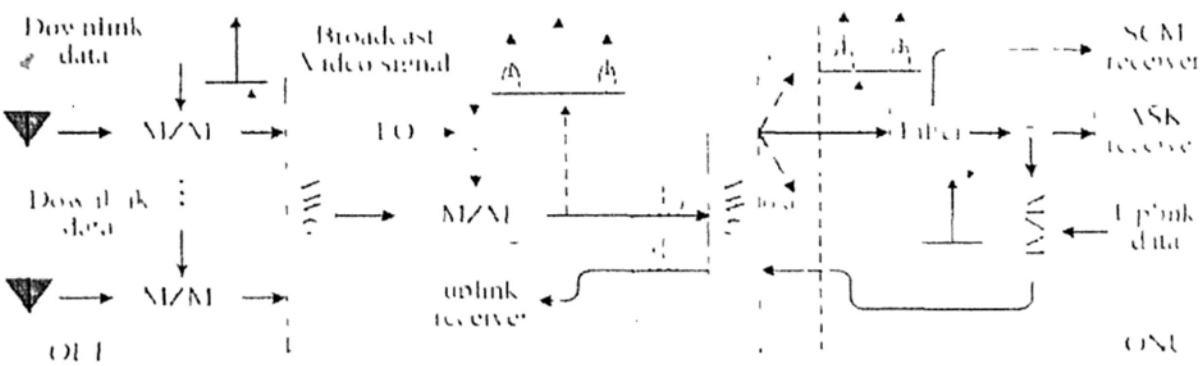

Fig. 3.3 Another multicast enabled WDM-PON architecture based on SCM [59]

Fig. 3.3 shows another multicast enabled WDM-PON architecture based on SCM [59], which requires less costly dedicated electronic devices at the OLT and no additional light sources at the ONUs compared with structure demonstrated in [58]. In this scheme, continuous wavelength (CW) light sources, instead of direct-modulated DFB lasers, were externally intensity modulated by the downstream NRZ-ASK unicast signal. And the multicast SCM video signals, generated by mixing a 10-GHz clock signal with a 1 25-Gb/s, was subcarrier multiplexed onto the unicast ASK data via the MZM Similar to [58], multicast control was realized by changing the extinction ratio of the downstream NRZ-ASK signals except that this scheme changed the bias voltage of the intensity modulator to realize different extinction ratios Since the downstream power was reused for the upstream transmission, no additional light sources were needed in ONUs, but the optical filter used at the ONU still kept it colored, which might raise the cost of an ONU The main disadvantage was the possible interference among the downstream unicast, multicast and upstream traffic, because they were all amplitude modulated This interference could limit the performance and transmission speed of the system Besides, the delay between the unicast data and the electrical multicast SCM signal needed to be properly adjusted to ensure synchronization through an electrical phase shifter

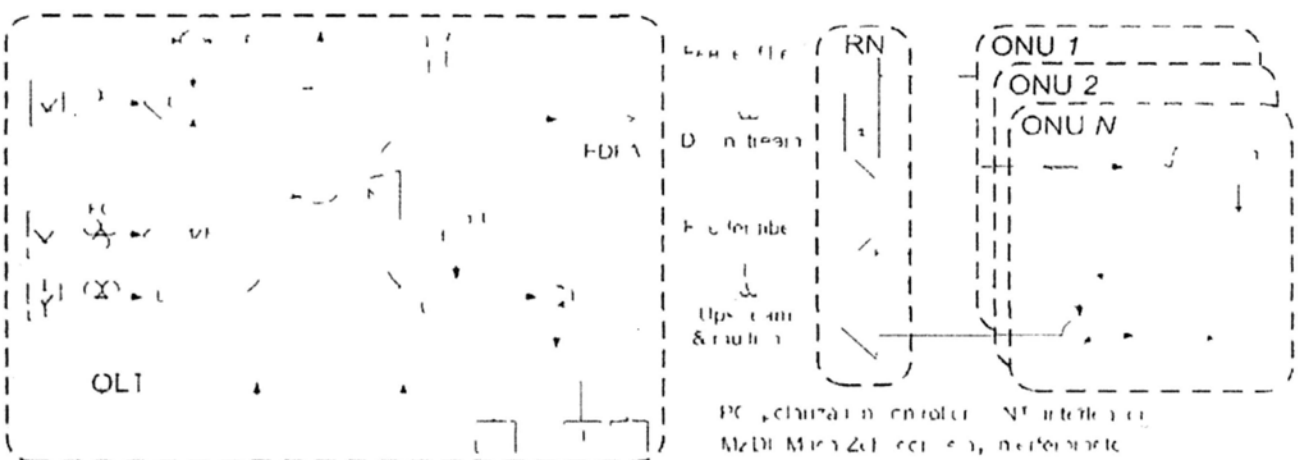

Fig 3 4 A third SCM based multicast architecture [60]

In order to alleviate the interference among downstream unicast, multicast and upstream transmissions, a third SCM based multicast architecture was proposed as shown in Fig 3-4 [60] Different from previous schemes, a SCM downstream signal was first generated by a dual-drive Mach-Zehnder modulator (DDMZM), driven by a combined signal of unicast data and a RF clock. The SCM downstream signal, comprising a central carrier and subcarriers with unicast data on it, were then separated through an optical interleaver, where the central carrier was separated out onto a different transmission link for multicast traffic after intensity modulated by the multicast signal via a common MZM. Meanwhile, the remained subcarriers carrying unicast signal were delivered to ONUs for unicast data reception. At the ONU, half of unicast traffic power was reused for the upstream transmission. Because the unicast data and multicast data passed through two independent transmission links, the potential crosstalk or interference between them could be much reduced. The realization of multicast control was carried out by changing the bias current of the DDMZM which determined the generation of the central carrier in the SCM signal. Multicast transmission would be enabled if the SCM signal has central carrier but disabled without central carrier. The system could relieve the crosstalk between unicast and multicast to some extent through different transmission links, but the unicast signal might still leak to central carrier. In addition, the unicast data on the double-sideband subcarrier suffered from serious coherent beating noise and required additional electric low-pass filter at the ONU for data reception.

The advantages of the above SCM based schemes include: 1) Multicast transmission requires no additional light sources but are overlaid onto the conventional unicast transmission, which implies fewer changes to upgrade from conventional point-to-point system to a multicast enabled system and a lower cost of the system. 2) The multicast control unit of this system is centralized at the OLT consisting of only simple electrical switching circuits, implying convenient management with a high-speed, effective and centralized switching. 3) The subcarrier multiplexing system is well-developed with a long period of practical deployment in commercial broadcast radio/video services, and thus the SCM based multicast enabled system can be highly compatible to the existing broadcast systems, reducing the cost and the instability of the whole architecture.

However, transmission speed of the subcarrier modulated signal in a SCM based system is limited due to the processing speed of electrical devices used in the SCM module, which makes SCM not effectively for high-speed multicast systems when expensive electrical devices with high bandwidth are required. In order to increase the transmission speed of the system, some multicast overlay schemes using the characteristics of specific modulation formats have been proposed.

3.2.3 Overlay schemes using the characteristics of specific modulation formats

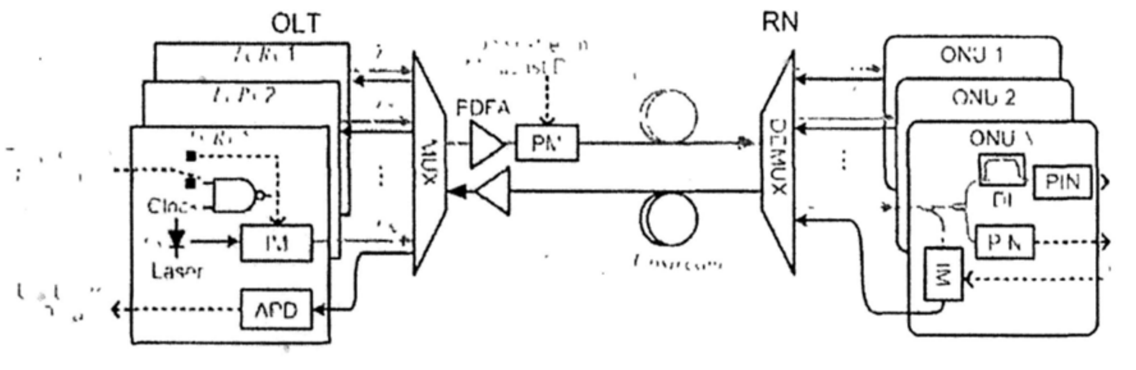

Fig. 3.5 A multicast enabled WDM-PON architecture employing IRZ [61]

Fig. 3.5 depicts a WDM-PON architecture with multicast overlay employing inverse return-to-zero (IRZ) format [61], which always has power in the second half of the transmitted bit implying the possibility to carry a second data stream onto this second half of the bit. Therefore, a single IRZ signal stream can simultaneously support two different data streams, one for unicast and another for multicast transmission. On the contrary, non-return-to-zero (NRZ) with high extinction ratio is incapable to transmit second data stream on its own because there is negligible power existing when "0"s are transmitted. In this approach, the multicast control was realized by changing the modulation format of downstream unicast from IRZ to NRZ. When the unicast format was IRZ, the multicast differential phase-shift-keying (DPSK) video signal superimposed on it could be successfully received, but the multicast transmission would be disabled when unicast data was in high extinction ratio NRZ format. In the experiment, a logic NAND gate at the OLT driven by a combined signal of clock and the downstream unicast data was used to generate IRZ format signals for multicast enabled mode. In the multicast disabled mode, a simple electrical circuit implemented at each transceiver triggered the unicast to bypass the logic NAND gate, and only high extinction ratio NRZ could be generated. Multicast DPSK signals were superimposed onto the downstream unicast data via a common phase modulator after all the downstream channels were multiplexed at the AWG. At the ONU, half of downstream power was reused for upstream transmission. The scheme avoided dedicated high electronic devices at the ONU as both multicast and unicast signals were directly detected, although some cost-effective electrical logic devices were still needed for multicast control, and the transmission speed of the system increases to 10 Gb/s. However, IRZ was not often employed in WDM-PONs, which makes it difficult to upgrade the existing system to multicast function as extra components were required to generate IRZ format.

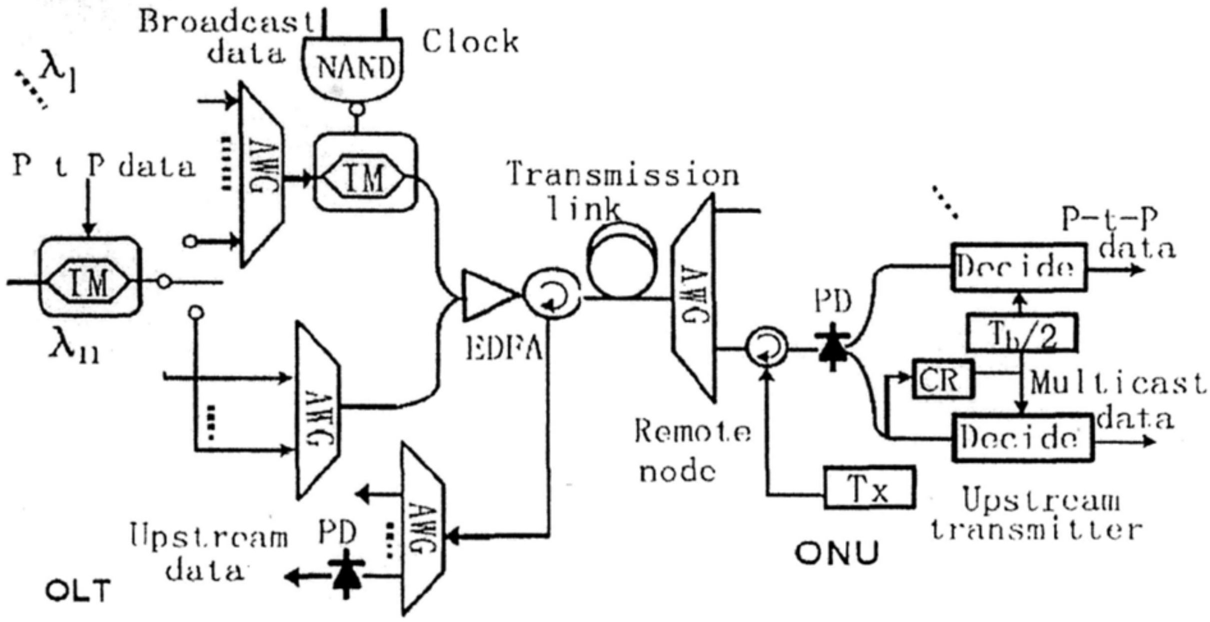

Fig. 3.6 Another multicast enabled WDM-PON architecture employing IRZ [62]

Fig. 3.6 depicts another WDM-PON architecture with multicast function using IRZ data format [62]. Different from the scheme in [61], IRZ was used as the modulation format for downstream multicast signal not for unicast signal. At the OLT, all the channels were first modulated by the downstream unicast NRZ data with low extinction ratio, when a low modulation depth about 0.1 to 0.2 was employed. For multicast enabled channels, the unicast signals were multiplexed at an AWG before being fed into a common MZM driven by the multicast IRZ data. Due to the low extinction ratio of unicast NRZ data, there was enough power to carry IRZ multicast data even if "0"s were transmitted. For the multicast disabled channels, unicast data were multiplexed by another AWG and bypassed the multicast modulation. Only an optical switch was needed at each transmitter to realize multicast control by changing the multiplexing path of unicast data. At the ONU, only one photodiode was required to detect both signals and no complex receiver was demanded. However, additional light sources were required for upstream transmission. Besides, in order to carry multicast data, unicast data remained in low extinction ratio, which greatly deteriorated the performance of unicast signals. Moreover, since unicast data and multicast data were both amplitude modulated, multicast data would be affected by the unicast data.

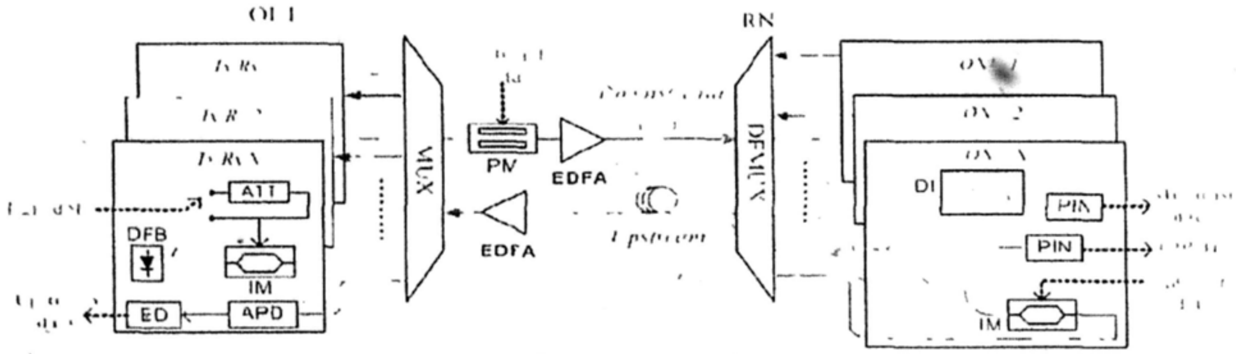

Fig. 3.7 A Multicast architecture using DPSK/NRZ orthogonal modulation [63]

Fig. 3.7 depicts a multicast WDM-PON architecture using DPSK/NRZ orthogonal modulation, which are both popular formats used in a WDM-PON. At the OLT, each individual downstream channel was first modulated by the extinction-ratio-controllable NRZ unicast signal via a Mach–Zehnder intensity modulator and then combined with other downstream channels via an AWG before fed into a common phase modulator, where the DPSK multicast data was further superimposed onto them. The combined downstream wavelengths simultaneously delivered both unicast NRZ data and multicast DPSK signal to the ONUs after amplified by an erbium-doped fiber amplifier (EDFA). At the ONU, due to the orthogonality of NRZ and DPSK formats, unicast and multicast data could be both recovered when the extinction ratio of NRZ signal remained low. On the contrary, only NRZ unicast could be recovered and multicast transmission was disabled. This extinction ratio (ER) control was realized at the OLT though a simple electrical switch, which changes the modulation path of the NRZ unicast data. Although the multicast and unicast data could be both recovered when the multicast transmission was enabled, the performance of unicast data was sacrificed due to its low ER, while the multicast DPSK data suffered from the intensity fluctuation induced by unicast NRZ data. In addition, the ER of the downstream unicast data could not be very high to keep its reusability for upstream intensity modulated data. Therefore, the ONU could remain simple and colorless, but the performance of the system was limited.

3.3 A WDM-PON with polarization-assisted multicast overlay control and its variant

3.3.1 Introduction

Multicast overlay is a promising technique to enable more flexible data delivery, a robust network architecture which can support simultaneous point-to-point (P2P) data as well as multicast data transmissions for future WDM-PONs. However, the schemes reviewed above suffer from either high system cost due to additional light sources as in [57], and limited transmission speed as in [58-60], or system power penalty due to the reduced extinction ratio as in [61-63]. In this section, we will propose a novel WDM-PON architecture which can simultaneously support both P2P and multicast data transmissions. Instead of superimposing the multicast data onto the P2P data on each downstream wavelength, the multicast data is modulated onto part of the unmodulated power from each transmitter at the OLT. In this way, the downstream P2P NRZ data and the multicast DPSK data for each ONU are carried on different wavelength carriers, thus, the system performance can be greatly improved. No additional dedicated light source for the multicast data is needed. The control of the multicast transmission is achieved by controlling the input polarization state of the unmodulated power from each transmitter to the common optical phase modulator

(PM) for multicast data modulation at the OLT. We have experimentally demonstrated 10-Gbit/s transmissions for the downstream P2P and multicast data, as well as the upstream data in a WDM-PON.

3.3.2 Proposed WDM-PON with polarization-assisted multicast overlay control

3.3.2.1 Proposed system architecture

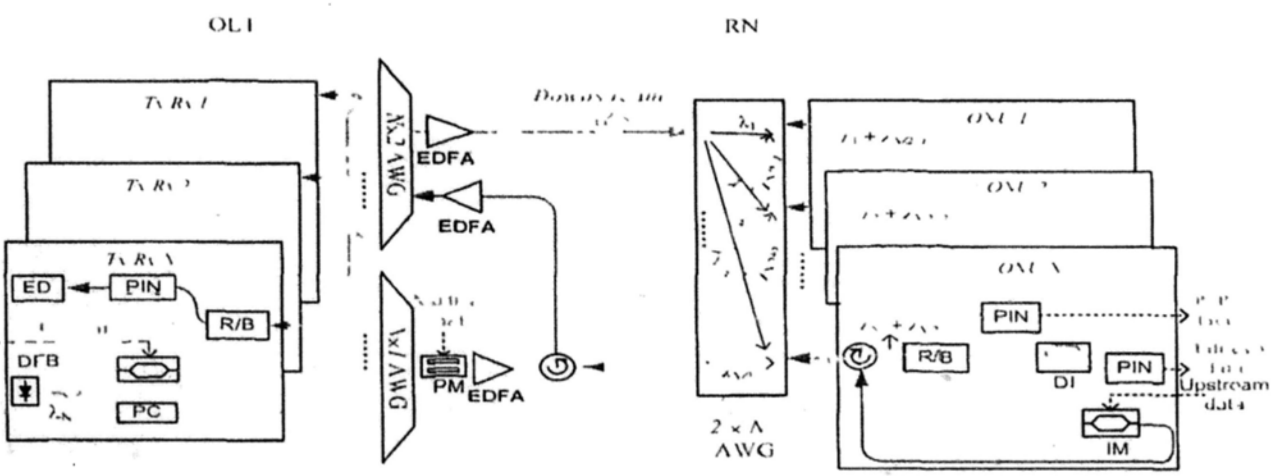

Fig. 3.8 Proposed WDM-PON with polarization-assisted multicast overlay control

Fig. 3.8 depicts the proposed WDM-PON multicast overlay architecture with N optical network units (ONUs). At the OLT, the CW optical power at λ_k (for k=1, 2, …, *N*) from the downstream transmitter #k is split into two parts. The first part is modulated with the respective downstream point-to-point (P2P) NRZ data, via the optical intensity modulator (IM), before being combined with the other modulated downstream P2P wavelengths, via an N×2 array waveguide gratings (AWG), for delivery to the RN over a fiber feeder. The same AWG is also used to route the upstream wavelengths received from the second fiber feeder to their destined upstream receivers. A red/blue (R/B) filter is employed at each transceiver to separate the received upstream wavelength and the transmitted downstream P2P wavelength, which are operated in counter-propagating directions. The second part of the CW optical power from each downstream transmitter is fed into a polarization control unit before being combined with that from all other downstream transmitters. The combined signal, which comprises the same set of downstream wavelengths, is then modulated with the multicast data in DPSK format, via the common PM, before being delivered to the RN, via a second fiber feeder. At the RN, a $2\times N$ AWG, in which its 1^{st} and the $(N/2+1)^{th}$ input ports are connected to the first and the second fiber feeders, respectively, is employed. It routes λ_i, which carries the downstream P2P data for ONU#i, from the first fiber feeder and λ_j, $j=\{[(i-1)+N/2] \bmod N\}+1$, which carries the multicast data from the second fiber feeder, to ONU#i, via its i^{th} output port. In this way, the downstream P2P wavelength and the multicast wavelength received at the same ONU are always spaced by at least quadruple wavelength spacing and thus can be separated by an R/B filter. Part of the power of the received multicast wavelength is re-modulated with NRZ upstream data and thus serves as the upstream carrier. The upstream wavelengths from all ONUs are sent back to the OLT, via the second fiber feeder, as shown in Fig. 3.8. Table 3.1 shows an example of the wavelength assignment.

	← *Blue Band* →				← *Red Band* →			
	ONU#1	**ONU#2**	**ONU#3**	**ONU#4**	**ONU#5**	**ONU#6**	**ONU#7**	**ONU#8**
P2P	λ_1	λ_2	λ_3	λ_4	λ_5	λ_6	λ_7	λ_8
Multicast	λ_5	λ_6	λ_7	λ_8	λ_1	λ_2	λ_3	λ_4

Table 3.1 An example of wavelength assignment for a WDM-PON with 8 ONUs.

The control of the multicast transmission is achieved by a simple polarization-assisted scheme at the OLT. It is based on the property that the PM for multicast data modulation is polarization dependent with respect to the polarization of the input optical carrier. From the wavelength assignment, λ_j, j={[(i-1)+N/2] mod N} + 1, is the multicast wavelength destined for ONU#i. In order to enable the multicast data for ONU#i, the polarization control unit at the jth transceiver at the OLT should be set to align the polarization of λ_j with the principal axis of the crystal in the PM, so as to maximize the degree of phase modulation. In contrast, the multicast data can be disabled by switching the polarization of λ_j to be orthogonal with the principal axis of the crystal in the PM, so as to minimize the degree of phase modulation. The polarization control unit can be realized by employing commercially available polarization switch module or dynamic polarization controller to perform the polarization conversion.

3.3.2.2 Experimental demonstration

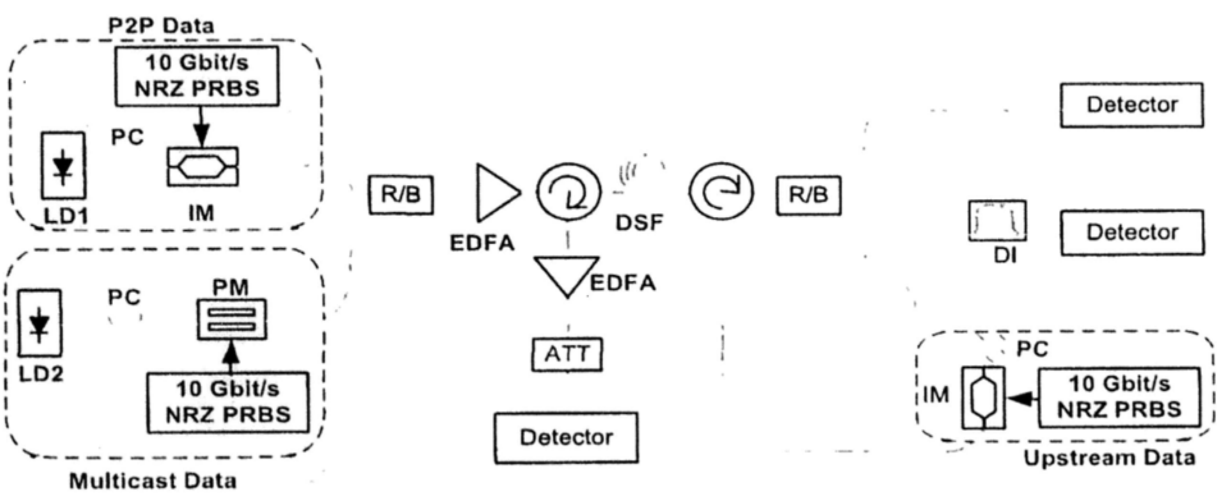

Fig. 3.9 Experimental setup of proposed polarization-assisted WDM-PON. IM: optical intensity modulator, PM: optical phase modulator, DI: delay interferometer, PC: polarization controller, R/B: Red/blue filter, ATT: optical attenuator, EDFA: Erbium-doped fiber amplifier, DSF: dispersion-shifted fiber.

Fig. 3.9 shows the experimental setup. A CW light at 1541.23 nm was intensity-modulated by a 10-Gb/s 2^{31}-1 pseudorandom binary sequence (PRBS) P2P data, while another CW light at 1547.63 nm was phase-modulated by the 10-Gbit/s multicast data. A polarization controller (PC) was placed before the PM to serve as the polarization control unit for multicast control. We have characterized the polarization sensitivity of the PM for DPSK modulation by varying the input polarization. Fig. 3 shows that the performance of the demodulated DPSK signal suffered from BER floor when the deviation of the input polarization from its optimal state was beyond 52° and the respective eye diagram almost closed. This can be adopted as the threshold for polarization switching. Then, the P2P and multicast data were combined by an R/B filter before being fed into an EDFA, where they were amplified to 7 dBm. The downstream signals were delivered to the ONU, via a piece of 20-km dispersion-shifted fiber (DSF), which was used to emulate a dispersion compensated link. At the ONU, the P2P and multicast wavelengths were separated by an R/B filter. The P2P signal was directly detected. On the other hand, the multicast signal was fed into a 50/50 fiber coupler, where half of its power was fed into an optical delay interferometer (DI) for demodulation before direct detection, while the other half was

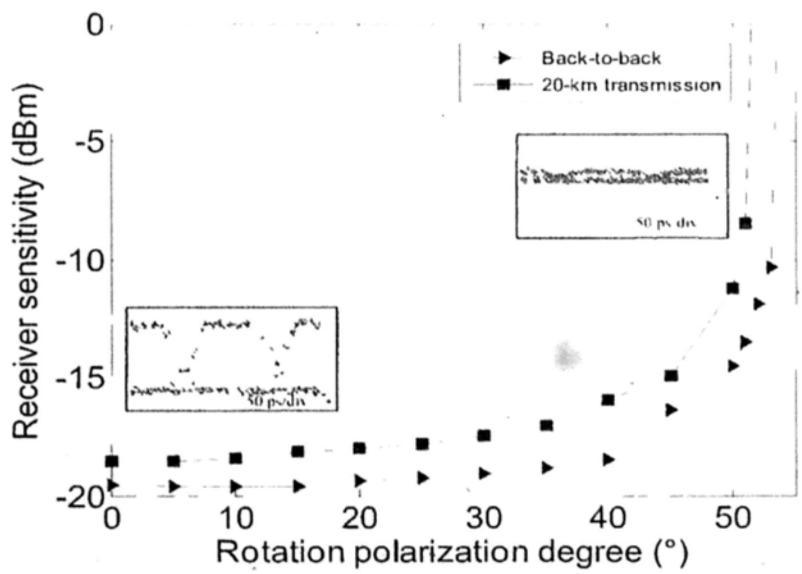

Fig. 3.10 Measured performance of the demodulated DPSK signal versus the input polarization to the optical phase modulator. Insets show the respective eye diagrams at different input polarizations.

re-used as the upstream carrier, which was then intensity modulated with the 10-Gb/s 2^{31}-1 PRBS NRZ upstream data. The upstream signal was then sent back to the OLT, via the 20-km DSF and an optical circulator, before it was separated from the downstream signal and detected.

We have also measured the bit error rate (BER) performance of the 10-Gb/s transmissions of the downstream P2P data, the multicast data, as well as the upstream data. Fig. 3.11 shows the BER performance of the downstream P2P NRZ and multicast DPSK data for both back-to-back and 20-km transmissions. The P2P NRZ data and the multicast DPSK suffered from about 1-dB and 1.2-dB power penalty after 20-km transmission, respectively, due to possible Rayleigh backscattering, while they showed sensitivity improvement by 7 dB and 4 dB, respectively, as compared with the measurements, as reported in [63]. When the multicast transmission was disabled by polarization control of the multicast wavelength at the OLT, the received DPSK signal suffered from severe eye-closure and thus could not be demodulated properly.

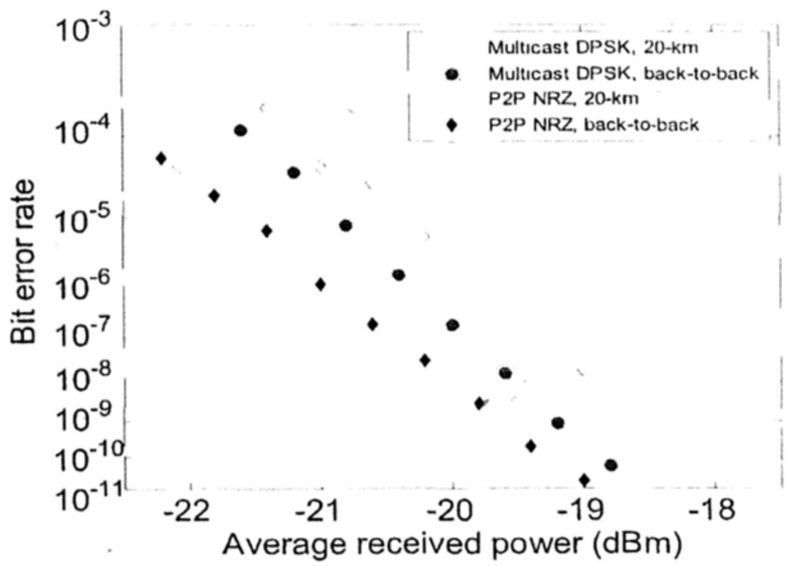

Fig. 3.11 BER measurements of 10-Gb/s downstream transmissions P2P NRZ data: (◆,◇), multicast DPSK data (●,○)

Fig. 3.12 shows the BER measurements for the upstream transmission. About 2.3-dB power penalty was measured after 20-km transmission under both multicast-enabled and multicast-disabled conditions, which might be due to the Rayleigh backscattering in the bi-directional transmission on a single fiber. The about 0.3-dB power penalty for multicast ON condition compared with multicast OFF might be caused by the phase-to-intensity conversion present in the upstream carrier.

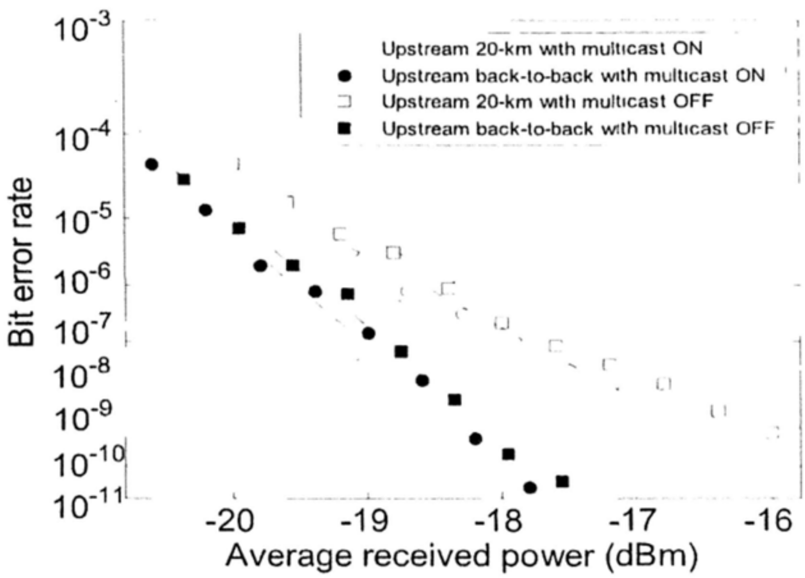

Fig. 3.12 BER measurements of 10-Gb/s upstream transmission Multicast-enabled (●,○), multicast-disabled (■,□)

In our experiment, the power fed into transmission link was about 7 dBm. The downstream loss caused by transmission, optical circulator and R/B filter was around 7 dB, thus the power after R/B filter was around -3 dBm. The received power for P2P data provided more than 16 dB system margin, while the the received power for multicast data after DI was around -11 dBm, implying around 7 dB system margin. Another portion of the multicast power was remodulated by an IM, which induced about 6 dB loss, so the received power at OLT was around -18 dBm without amplification. However, by using amplifier before multiplexer, the system can provide enough power margin for the upstream transmission.

3.3.3 Varied WDM-PON with switch-assisted multicast overlay control

With the same idea to provide a separate path for the multicast data from downstream point-to-point data without additional light sources by the cross-use of the downstream wavelengths, we change the control method at the OLT together with the modulation formats for both P2P and multicast data. Here we use an optical switch in place of the polarization controller, while multicast data are modulated in ASK format and unicast in DPSK format.

3.3.3.1 Proposed system architecture

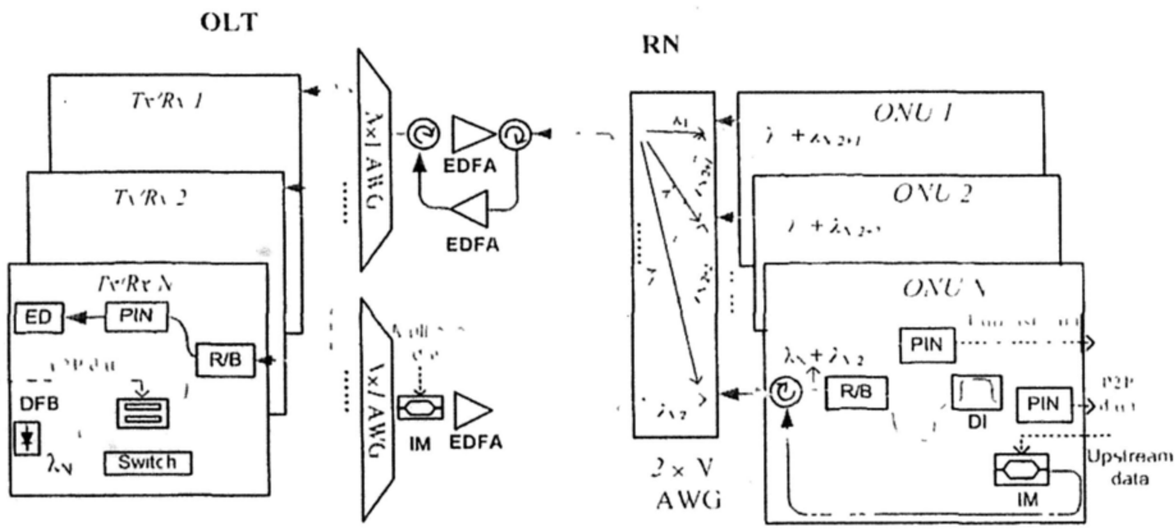

Fig. 3.13 Proposed WDM-PON with switch-assisted multicast overlay control

Fig. 3.13 depicts the varied multicast overlay scheme for a WDM-PON with N ONUs. At the OLT, the CW optical power at λ_k (for k=1, 2, ..., *N*) from the downstream transmitter #k is split into two parts. The first part is modulated with the respective downstream point-to-point DPSK data, via the optical phase modulator (PM), before being combined with the other modulated downstream point-to-point wavelengths, via an Nx1 AWG, for delivery to the RN over a piece of fiber feeder. The same link is also used for the upstream ASK transmission. An R/B filter is employed at each transceiver to separate the received upstream signal and the transmitted downstream point-to-point signal, which are operated in counter-propagating directions. The second part of the CW optical power from each downstream transmitter is fed into an optical ON/OFF switch, where a simple control of multicast is realized, before being combined at another Nx1 AWG. The combined signal, which comprises the same set of downstream wavelengths, is then modulated with the multicast data in ASK format, via the IM, before being delivered to the RN, via the second fiber feeder. At the RN, a 2xN AWG, in which its 1^{st} and the $(N/2+1)^{th}$ input ports are connected to the first and the second fiber feeders, respectively, is employed. It routes λ_i, which carries the downstream point-to-point data for ONU#i, from the first fiber feeder and λ_j, $j=\{[(i-1)+N/2] \bmod N\}+1$, which carries the multicast data from the second fiber feeder, to ONU#i, via its i^{th} output port. In this way, the downstream point-to-point wavelength and the multicast wavelength received at the same ONU are always spaced by at least quadruple wavelength spacing and thus can be separated by an R/B filter. Part of the power of the received point-to-point DPSK downstream wavelength is re-modulated with the upstream ASK data and thus serves as the upstream carrier. The wavelength assignment is the same as that in the polarization-assisted scheme. The multicast overlay control is achieved by a simple optical ON/OFF switch at each optical transceiver at the OLT, which is to control the power for multicast transmission for each transceiver.

3.3.3.2 Experimental demonstration

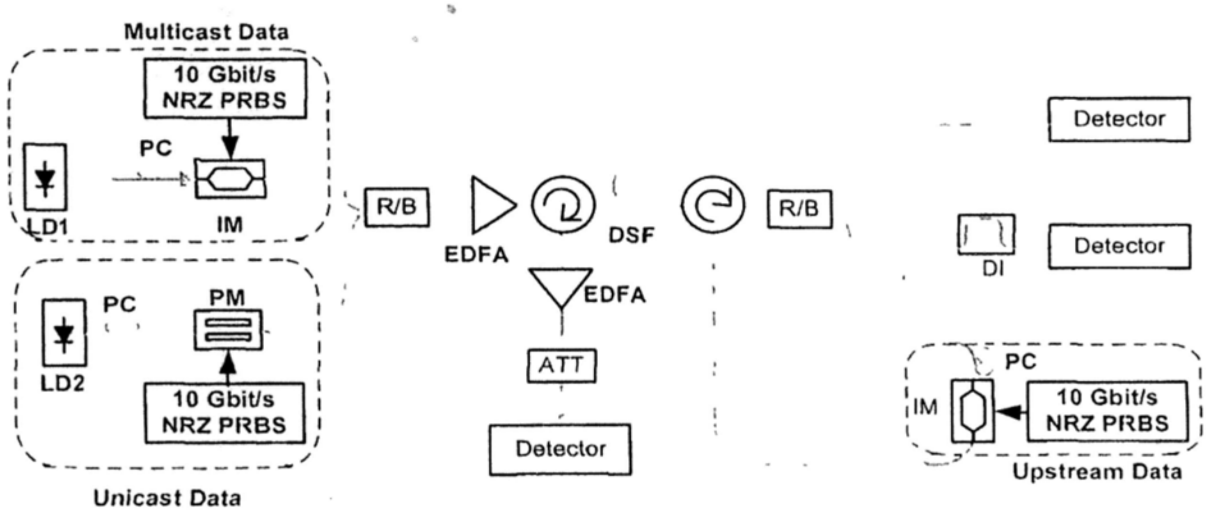

Fig. 3.14 Experimental setup of proposed switch-assisted WDM-PON

Fig. 3.14 shows the experimental setup. A CW light at 1541.23 nm was intensity-modulated by a 10-Gbit/s 2^{31}-1 pseudorandom binary sequence (PRBS) multicast data, while another CW light at 1547.63 nm was phase-modulated by the 10-Gbit/s point-to-point data. An optical ON/OFF switch was placed before the IM for multicast control. Then, the point-to-point and multicast data were combined by an R/B filter before being fed into an EDFA, where they were amplified to 7 dBm. The downstream signals were delivered to the ONU, via a piece of 20-km dispersion-shifted fiber (DSF), which was used to emulate a dispersion compensated link. At the ONU, the point-to-point and multicast wavelengths were separated by an R/B filter. The multicast signal was directly detected. On the other hand, the point-to-point signal was fed into a 50/50 fiber coupler, where half of its power was fed into an optical delay interferometer (DI) for demodulation before direct detection, while the other half was re-used as the upstream carrier, which was then intensity modulated with the 10-Gb/s 2^{31}-1 PRBS NRZ upstream data. The upstream signal was then sent back to the OLT, via the 20-km DSF and an optical circulator, before it was separated from the downstream signal and detected.

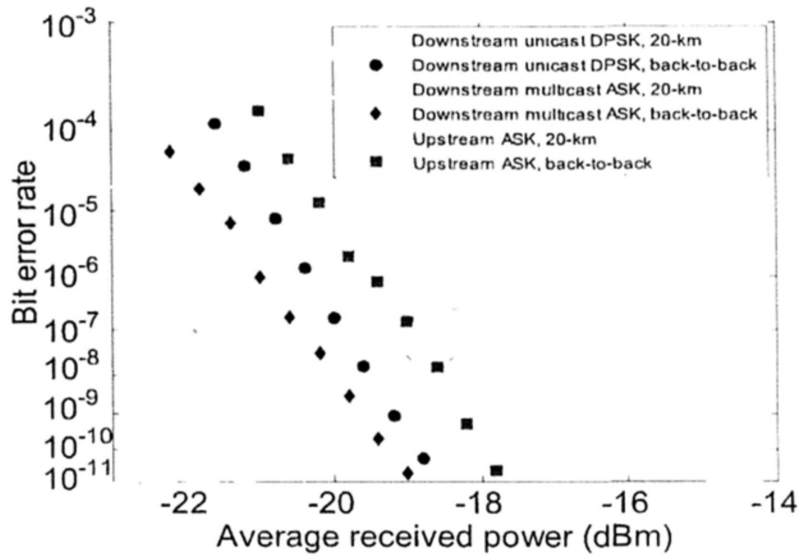

Fig. 3.15 BER measurements of 10-Gb/s transmissions: downstream point-to-point DPSK (○,●), downstream multicast ASK (◇,◆); upstream ASK (□,■)

We measured the bit error rate (BER) performance of the 10-Gb/s transmissions of the downstream multicast data, the point-to-point data, as well as the upstream data, shown in Fig. 3.15. The downstream multicast ASK data and the point-to-point DPSK data suffered from about 1-dB and 1.2-dB power penalty after 20-km transmission, respectively, while they showed sensitivity improvement by 6 dB and 5 dB, respectively, as compared with the measurements, reported in [63]. In the upstream transmission, about 2.3-dB power penalty was measured after 20-km transmission. This might be due to the Rayleigh backscattering and phase-to-intensity conversion present in the upstream carrier.

Although the control of the multicast transmission on individual was achieved differently, either by controlling the input polarization state of the unmodulated power to the common optical modulator for multicast data modulation or by switching on/off of the unmodulated power, via an optical ON/OFF switch, one using polarization-controller and another using on/off optical switch, both systems have shown a great performance improvement by providing a separate path for the multicast data and eliminating the performance limitation of unicast data due to its low ER as in [63]. Besides, the orthogonality of ASK and DPSK modulation formats was utilized to eliminate the interference among different kinds of data. Any other modulation formats that have the orthogonal property can be used. In this scheme, we chose ASK and DPSK modulation formats due to their low cost and complexity. However, power penalty was observed after 20-km transmission under both multicast-enabled and multicast-disabled conditions, which might be due to the Rayleigh backscattering in the bi-directional transmission on a single fiber. In the next part, we will introduce another multicast-supporting WDM-PON architecture using optical carrier suppression technique, which inherits the advantage of polarization-assisted structure, but alleviates the Rayleigh backscattering that existing in the bi-directional transmission on a single fiber.

3.4 An optical multicast overlay scheme using optical carrier suppression technique (OCS)

3.4.1 Introduction

In this section, we propose and demonstrate a novel optical multicast overlay scheme which can eliminate the possible Rayleigh backscattering effect existing in polarization-assisted and switch-assisted schemes, while keeping the main advantages of them, such as no sacrifice in unicast data and no additional light sources for multicast transmission with colorless ONUs. It is based on the optical carrier suppression (OCS) technique [81] at the OLT so as to generate the sub-carriers or sidebands for multicast ASK data modulation. The downstream unicast data is modulated in DPSK format, which will be re-modulated with the upstream ASK data at the respective destined ONU. The control of the multicast transmission is achieved by simply setting the control clock signal at the OLT. Simultaneous 10-Gb/s operations for downstream and upstream unicast traffic, as well as downstream multicast traffic have been demonstrated with satisfactory performance.

3.4.2 Proposed architecture based on OCS

3.4.2.1 System architecture

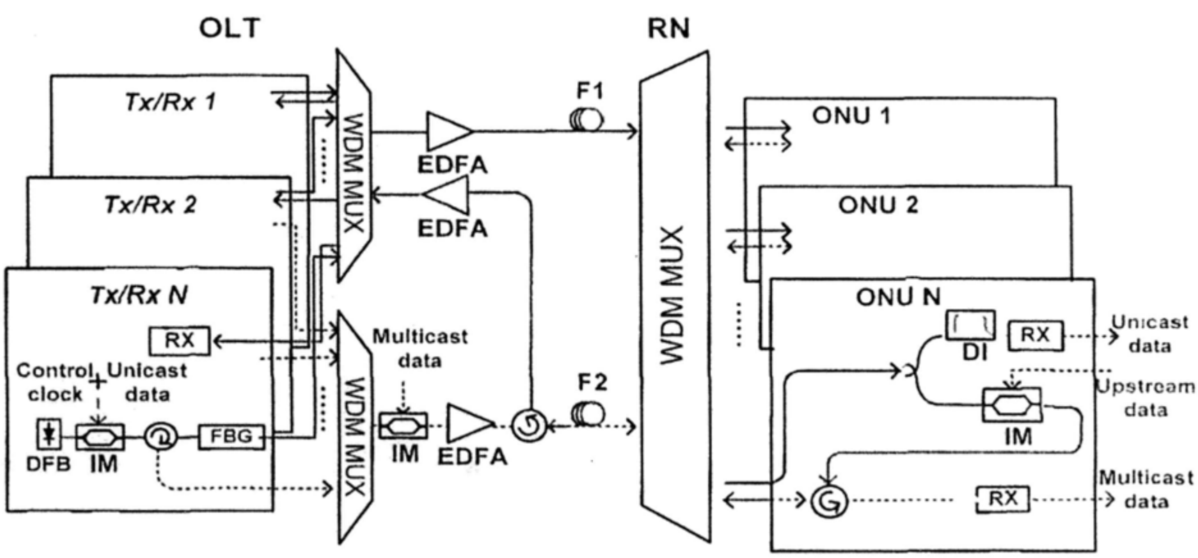

Fig. 3.16 The WDM-PON with OCS optical multicast overlay scheme. F1 & F2: fiber feeders, FBG: fiber Bragg grating, IM: optical intensity modulator, EDFA: Erbium doped fiber amplifier, DI: delay interferometer.

Fig. 3.16 depicts the proposed WDM-PON with N ONUs. At the OLT, the CW light from each transmitter is first modulated by a composite signal, which comprises a sinusoidal control clock signal and the downstream unicast NRZ data, via a Mach-Zehnder optical intensity modulator (IM) in order to generate central carrier suppressed sub-carriers for multicast-enabled transmission mode. As for Mach-Zehnder optical modulator, the output field can be described as below [82]:

$$E_{out}(t) = E_{in}(t)\cos[\frac{\pi}{2}\cdot\frac{V_m(t)}{V_\pi}] \tag{1}$$

where $E_{in}(t)$ is the incident optical field, $V_m(t)$ is the modulating electrical signal applied to the modulator, V_π is the half-wave voltage of the modulator. In the OCS process, modulating signal, $V_m(t)$, is a control clock signal and can be written as:

$$V_m(t) = (1+\varepsilon)V_\pi + \alpha V_\pi \cos(2\pi f_c t) \tag{2}$$

The first part of (2) is the bias current applied to the IM, and the second part is the control clock with a frequency of f_c, both of which are normalized to V_π using the terms ε and α. Assume the incident optical signal is a normalized sinusoidal signal with a frequency of f_0, and expressed as:

$$E_{in}(t) = \cos(2\pi f_0 t) \tag{3}$$

Using (1), (2), and (3), the output optical field can be expressed as follows:

$$E_{out}(t) = \cos[\frac{\pi}{2}\cdot(1+\varepsilon) + \alpha\cos(2\pi f_c t)]\cdot\cos(2\pi f_0 t) \tag{4}$$

In order to analyze (4), we use Bessel function to expand the output optical field $E_{out}(t)$, and we get:

$$\begin{aligned} E_{out}(t) = {} & \frac{1}{2}J_0(\alpha\frac{\pi}{2})\cos[(1+\varepsilon)\frac{\pi}{2}]\cos(\omega_0 t) \\ & + \sum_{k=1}^{\infty}\{(-1)^k J_{2k-1}(\alpha\frac{\pi}{2})\sin[(1+\varepsilon)\frac{\pi}{2}]\cos[\omega_0 t \pm (2k-1)\omega_c t] \\ & + (-1)^k J_{2k}(\alpha\frac{\pi}{2})\cos[(1+\varepsilon)\frac{\pi}{2}]\cos(\omega_0 t \pm 2k\omega_c t)\} \end{aligned} \tag{5}$$

$$2\pi f = \omega \tag{6}$$

where J_i is the *ith* Bessel function of the first kind. In order to suppress the central carrier, the component at ω_0 in (6) should equal to zero, or satisfies the condition:

$$\frac{1}{2}J_0(\alpha\frac{\pi}{2})\cos[(1+\varepsilon)\frac{\pi}{2}]\cos(\omega_0 t) = 0 \tag{7}$$

From which we get:

$$J_0(\alpha\frac{\pi}{2})=0 \quad \text{or} \quad \cos[(1+\varepsilon)\frac{\pi}{2}]=0 \qquad (8)$$

In this article, we set the bias of IM at $v_\pi(\varepsilon=0)$ also known as its null transmission point, then the components at ω_0 is suppressed together with all the even terms. The IM used here is not only for the OCS but also for the generation of DPSK data, which is also known as OCS-DPSK format. Therefore a combined signal of a control clock and the unicast data is used to drive the IM. The peak-to-peak driving voltage (V_{pp}) of both the control clock and the unicast data should be twice of the half-wave voltage (V_π) of the IM. In this way, the optical central carrier is suppressed, while the two generated sidebands (optical sub-carriers) are carrying the unicast data in DPSK format. One of the generated optical sub-carriers is then filtered off and reflected, via a fiber Bragg grating (FBG). The reflected optical sub-carriers from all transmitters at the OLT are combined, via a WDM multiplexer, before being fed into a common IM for multicast ASK data modulation. The multicast composite signal is then delivered over the fiber feeder (F2) and demultiplexed at the remote node (RN) before being detected at their respective destined ONUs. On the other hand, the subcarrier at the transmission output port of the FBG is transmitted to the respective ONU, via the fiber feeder (F1), to deliver the unicast data. At the ONU, part of the received unicast DPSK data is demodulated, via an optical delay interferometer (DI), before direct detection. The rest of the downstream power is then fed into an IM for upstream ASK data modulation. The upstream signal is then transmitted, via the fiber feeder (F2), back to the respective receiver unit at the OLT. As the downstream unicast signal and the upstream signal are carried on different fiber feeders, while the upstream signal and the multicast signal are carried on different optical sub-carriers, though on the same fiber feeder, the possible Rayleigh backscattering effect is much alleviated.

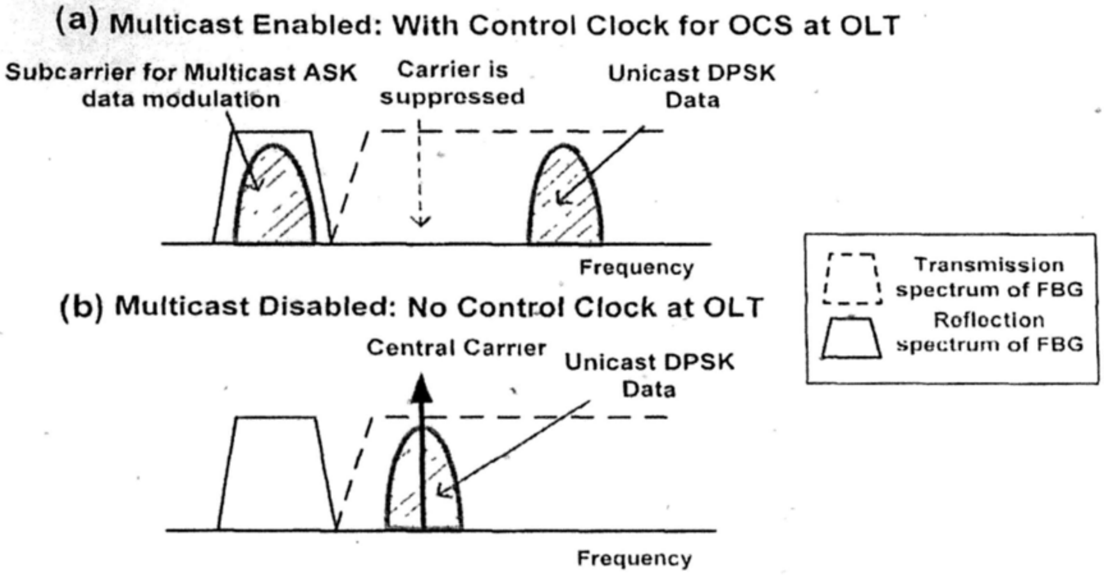

Fig. 3.17 Spectra of downstream carrier to illustrate the principle of multicast overlay control via OCS.

The control of multicast transmission for individual downstream channel is achieved by turning on or off the control clock signal at the respective transmitter at the OLT as shown in Fig. 3.17. When the control clock is present, the subcarrier for multicast data modulation is generated, hence multicast transmission is enabled. On the contrary, when the control clock is absent, the subcarrier is no longer generated, thus there is no optical power available to carry the multicast data and disables the multicast transmission, but the central carrier still exists for unicast transmission. The multicast control of all transmitters is performed at the OLT only.

3.4.2.2 Experimental demonstration

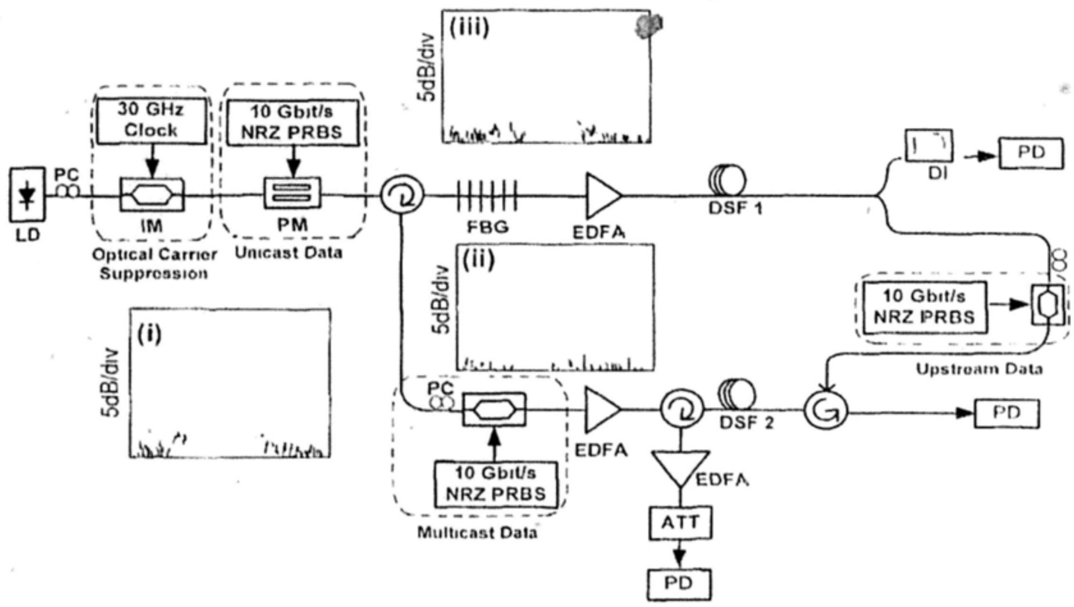

Fig. 3.18 Experimental setup. DSF: dispersion shifted fiber, PM: optical phase modulator, ATT: optical attenuator. Insets show the (i) output spectrum of the PM; (ii) reflected spectrum of FBG; (iii) transmitted spectrum of FBG. Horizontal scale: 0.5nm/div.

Fig. 3.18 shows the experimental setup for the proposed scheme. A CW light at 1536.41 nm was first fed into a 40-Gb/s optical IM, driven by a 30-GHz clock to perform OCS and create two sub-carriers, λ_{sub1} at 1536.17 nm and λ_{sub2} at 1536.65 nm. The two sub-carriers were then phase modulated by a 10-Gb/s 2^{31}-1 pseudorandom binary sequence (PRBS) unicast data, via an optical phase modulator (PM), to generate OCS-DPSK signal. This procedure of OCS-DPSK signal generation could be simplified with a single IM, as suggested in Fig. 3.17, but a broadband electrical combiner was needed. The OCS-DPSK signal, with a carrier suppression ratio of about 20 dB, as shown in Fig. 3.18 inset (i), was fed into an FBG with a reflection FWHM passband of 0.38 nm and a reflectivity of 99%, as depicted in Fig. 3.19, so as to separate the two optical sub-carriers. The sub-carrier λ_{sub1} , as shown in Fig. 3.18

inset (ii), was reflected into an IM, where it was intensity modulated by the 10-Gb/s 2^{31}-1 PRBS multicast NRZ data and amplified to about 3 dBm before being fed into a piece of 20-km fiber feeder (DSF2). Dispersion-shifted fiber (DSF) was employed to emulate dispersion compensated links for the fiber feeders. At the transmission output port of the FBG, λ_{sub2}, as shown in Fig. 3.18 inset (iii), was amplified to about 5 dBm and delivered the downstream unicast DPSK data to the ONU, via another piece of 20-km fiber feeder (DSF1). At the ONU, the multicast data was directly detected. In addition, half of the received unicast DPSK signal power on λ_{sub2} is fed into an optical DI for demodulation and detection; while the other half was re-used as the upstream carrier, which was then intensity modulated with the 10-Gb/s 2^{31}-1 PRBS upstream NRZ data. The upstream ASK signal was then sent back to the OLT, via DSF2, before it was separated from the downstream signal and detected.

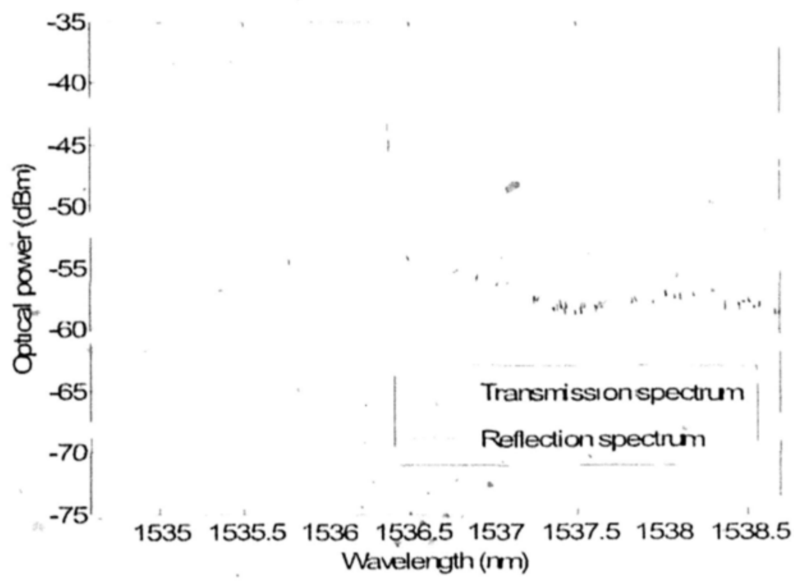

Fig. 3.19 Frequency response of the FBG

In order to characterize the performance of optical subcarrier separation, via the FBG, we have measured the power ratio of the transmitted signal to the reflected signal of the FBG at the source wavelength, when the two optical sub-carriers generated from the source CW wavelength, via OCS with the presence of the 30-GHz clock (multicast-on) and the central carrier with the absence of the 30-GHz clock (multicast-off). The results were depicted in Fig. 3.20. When the source wavelength was set around 1536.41 nm, the power ratio was almost close to 0 dB under the multicast-on case, implying both of the separated optical sub-carriers were separated with equalized intensity; while the power ratio was close to 15 dB under the multicast-off case, implying good suppression of the multicast signal.

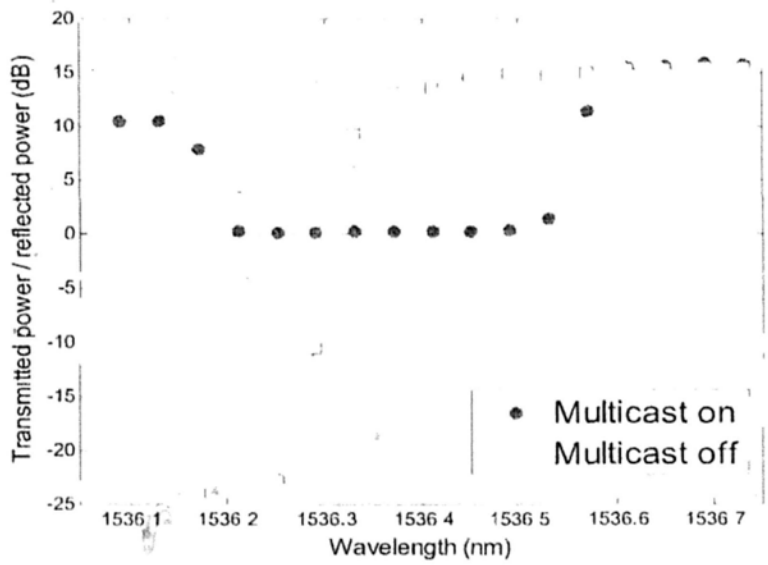

Fig. 3.20 Power ratio of the transmission power of the FBG over the reflective power of the FBG when the clock is 30 GHz

Fig. 3.21 shows the measured BER performances when the multicast was enabled by turning on the control clock signal to generate the optical sub-carrier for the multicast modulation. Less than 0.5-dB penalty was observed for the unicast, the multicast and the upstream data after transmission, showing receiver sensitivity improvements by about 5 dB and 3 dB, for unicast and multicast transmissions, respectively, as compared with the previously reported approach [63]. Fig. 3.22 shows the bit-error-rate (BER) performances when the multicast was disabled by turning off the control clock signal. The receiver sensitivities for downstream unicast and upstream signals were degraded by 1.2 dB and 1.6 dB, respectively, after transmission, as compared with the multicast-enabled case This could be attributed to the non-ideal reflection passband of the FBG, which induced excessive filtering to the central carrier when the control clock was absent. This could be alleviated by employing a FBG with steeper edges in its reflective pass-band.

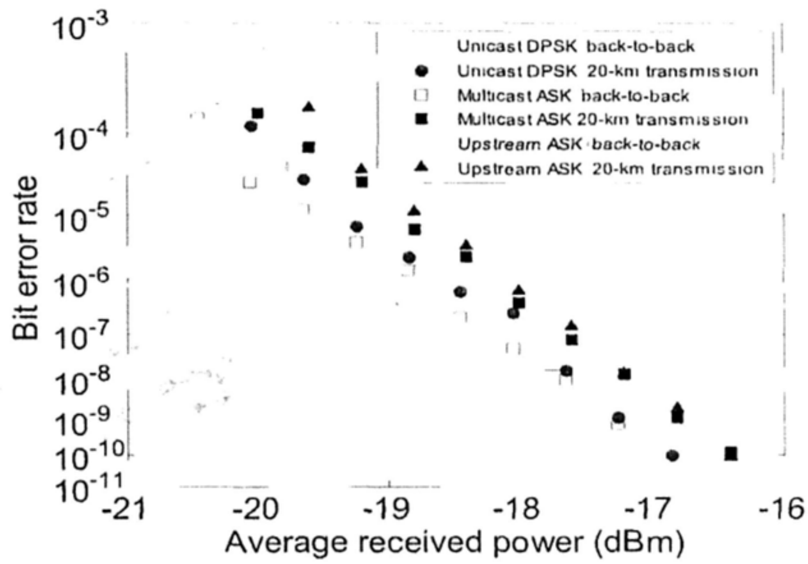

Fig. 3.21 BER measurements when multicast is enabled

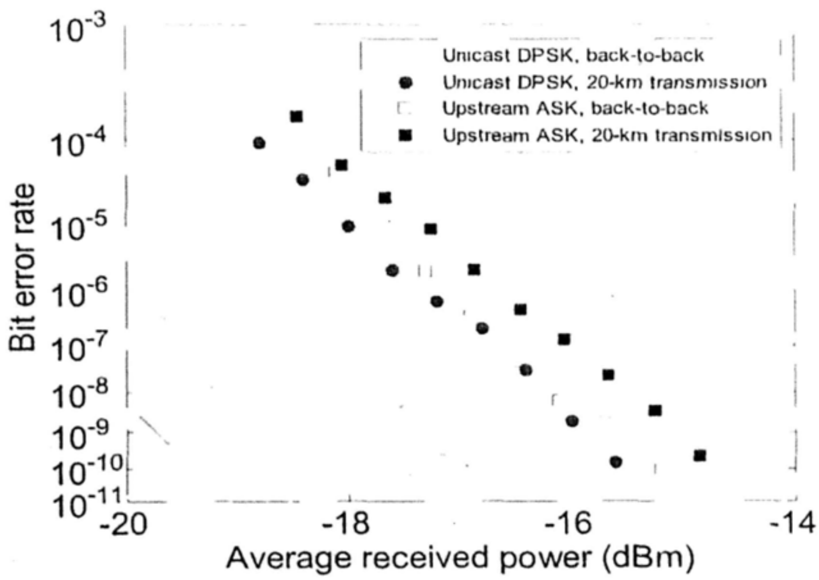

Fig. 3.22 BER measurements when multicast is disabled

In our experiment, the optical power fed into the fiber feeder was about 3 dBm and 5 dBm for multicast and unicast signals, respectively. The losses caused by transmission, optical circulators and DI were around 5 dB, 1 dB, and 5 dB respectively. Thus, at the ONU, the optical power for unicast data detection after DI was around -8 dBm, providing more than 9-dB system margin, while the optical power for multicast detection was around -3 dBm, implying around 14-dB system margin. Another portion of the unicast power was re-modulated at the ONU, via an IM, which induced about 6 dB insertion loss. Thus, the received optical power of the upstream signal at the OLT was around -15 dBm without amplification. However, by employing an optical amplifier before the WDM multiplexer at the OLT, the system could provide enough power margins for the upstream transmission.

3.4.3 Modified version of the scheme

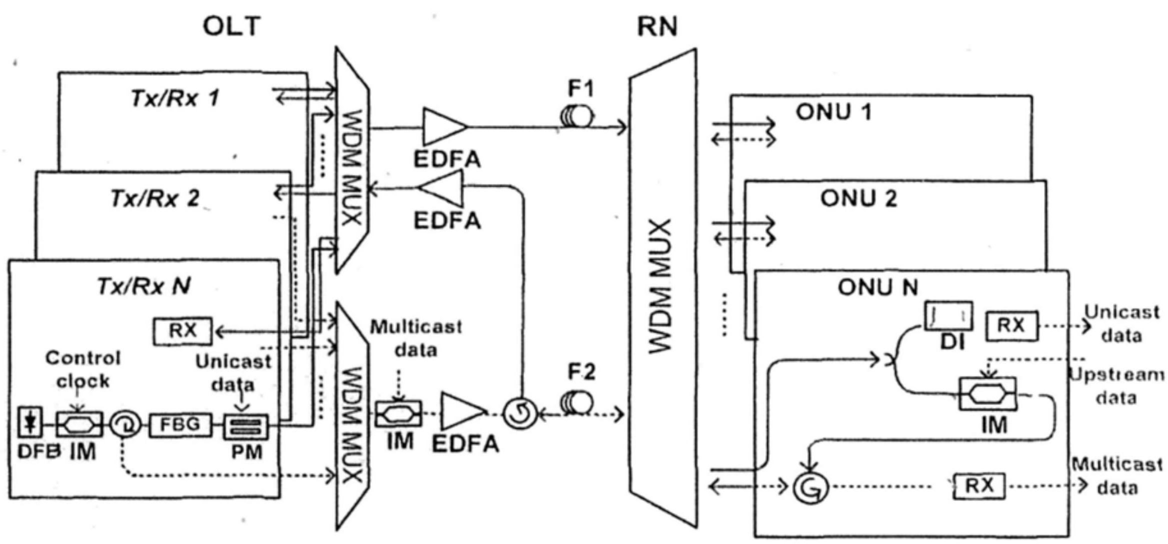

Fig. 3.23 The WDM-PON with modified multicast overlay scheme. F1 & F2: fiber feeders, FBG: fiber Bragg grating, IM: optical intensity modulator, EDFA: Erbium doped fiber amplifier, DI: delay interferometer.

Fig. 3.23 depicts the modified multicast WDM-PON architecture with N ONUs and the modifications are made at the OLT. Basically, at each transceiver of the OLT, the unicast data is modulated onto the generated optical sub-carriers at the output of FBG, via an optical phase modulator, instead. In this way, the non-ideal frequency response of the FBG will bring less phase-to-intensity noise to not only the multicast data but also the unicast data as well as the upstream data compared with the scheme shown in Fig. 3.16. This is attributed to the fact that phase modulation broadens the spectrum of the signal. When the phase modulation is performed before the FBG filtering, as in Fig. 3.16, the non-ideal frequency response of the FBG may convert the phase information into amplitude fluctuation, which deteriorates the signal performance. Such phase-modulation induced spectral broadening also reduces the optical carrier suppression ratio during the OCS process, and thus hinders the optical sub-carrier separation through the FBG. With the modified scheme, these impairments can be alleviated and thus leads to improvement in the system performance. In addition, the requirement for the control clock frequency can be relaxed.

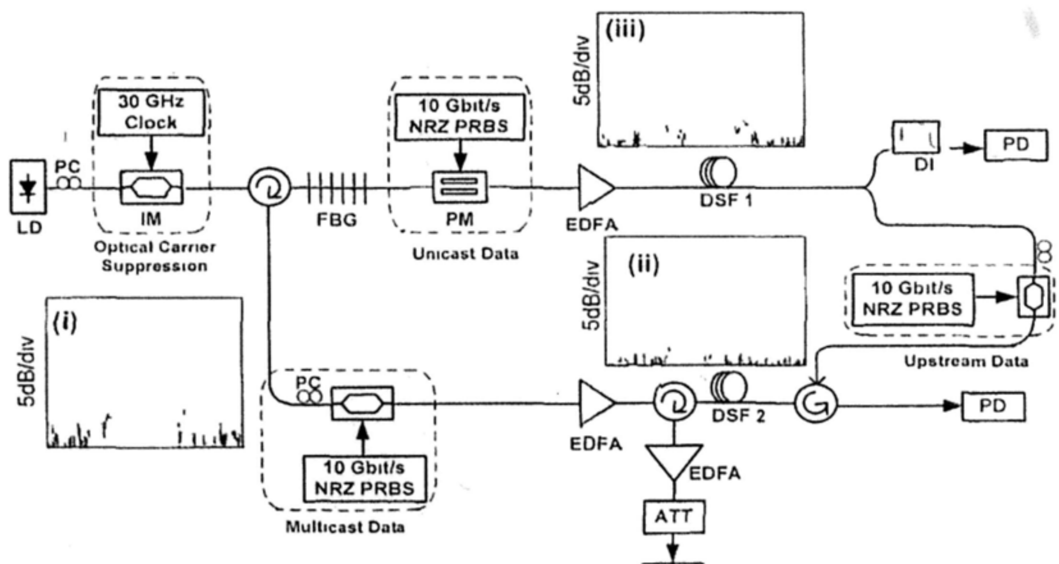

Fig. 3.24 Experimental setup of the modified scheme. Insets show the (i) output spectrum of the PM; (ii) reflected spectrum of FBG; (iii) transmitted spectrum of FBG. Horizontal scale: 0.5nm/div.

We have measured the BER performance to verify this possible improvement, using the experimental setup as shown in Fig. 3.24. Fig. 3.25 shows the measured BER performances with the presence of the 30-GHz control clock signal so as to generate the optical sub-carrier for the multicast modulation. Less than 0.3-dB penalty was observed for both the unicast and the multicast data, while about 0.5-dB penalty was observed for the upstream data after 20-km transmission. These showed receiver sensitivity improvements by about 1 dB and 0.8 dB, for the downstream and the upstream transmissions, respectively, as compared with the performances of the original scheme depicted in Fig. 3.21. Fig. 3.26 shows the BER performances with the absence of the control clock signal, thus the multicast transmission was disabled. The receiver sensitivities for the downstream unicast and the upstream signals were improved by 2.3 dB and 2.5 dB, respectively, after transmission, as compared with the performances of the original scheme depicted in Fig. 3.22. This larger improvement compared with multicast-enabled case was mainly attributed to the fact that the central optical carrier was closer to the non-ideal reflection edge of the FBG when the control clock was absent, thus would suffer from much more severe excessive filtering at the FBG.

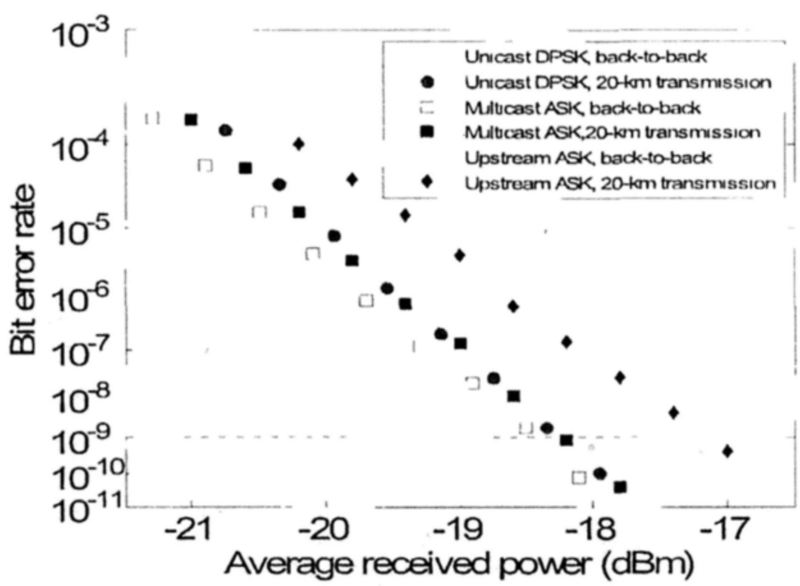

Fig. 3.25 BER measurements when multicast is enabled

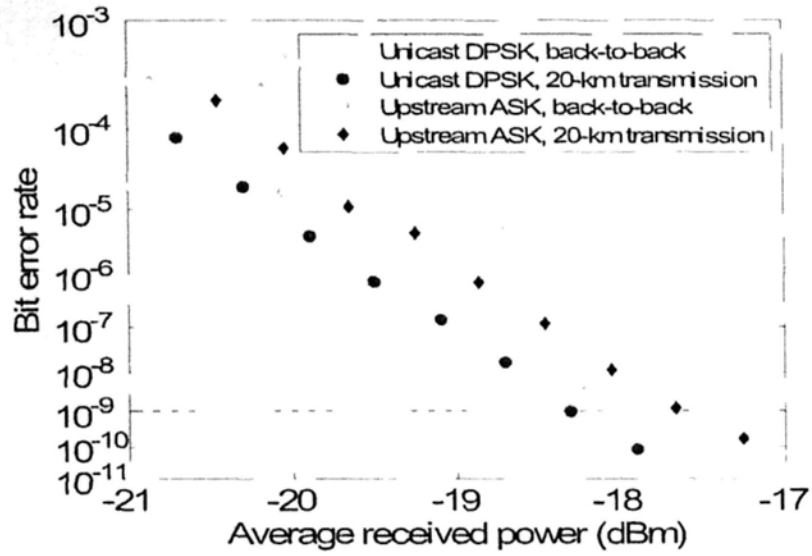

Fig. 3.26 BER measurements when multicast is disabled

In the experiment of the modified scheme, the optical power fed into the transmission link was about 3 dBm and 5 dBm for the multicast and the unicast signals, respectively. The losses caused by transmission, optical circulators and DI remained the same as in the original scheme. Thus the system margin for the unicast and the multicast transmissions were improved by 1 dB, to around 10 dB and 15 dB, respectively. While the system margin for upstream transmission was also improved by about 0.8 dB.

3.4.4 Control clock frequency requirement and residual Rayleigh backscattering effect

In the modified scheme, we have investigated the performances when the frequency of the control clock at the OLT are reduced to 20 GHz as well as 15 GHz. Fig. 3.27 shows the measured BER performances when the multicast transmission was enabled with the presence of the 20-GHz control clock. The receiver sensitivities after 20-km transmission were degraded by about 0.2 dB and 0.3 dB, for the downstream and the upstream transmissions, respectively, as compared with that when the clock was 30-GHz, as depicted in Fig. 3.25. These negligible degradations might be attributed to the slight reduction (from 23 dB to 21 dB) in the optical carrier suppression ratio. Fig. 3.28 shows the BER performances when we set the control clock frequency to 15-GHz. The receiver sensitivities for the downstream unicast and multicast signals were deteriorated by 1.1 dB and 0.6 dB, respectively, after transmission, while about 1.3-dB degradation was observed for the upstream signal, as compared with that depicted in Fig. 3.25. These larger degradations might be attributed to the larger reduction (from 23 dB to 15 dB) in the optical carrier suppression ratio when the control clock frequency was 15 GHz. The closer spacing between the two subcarriers would induce more noises due to phase-to-amplitude conversion at the FBG, and induced more degradation to the upper optical sub-carrier than the lower optical sub-carrier.

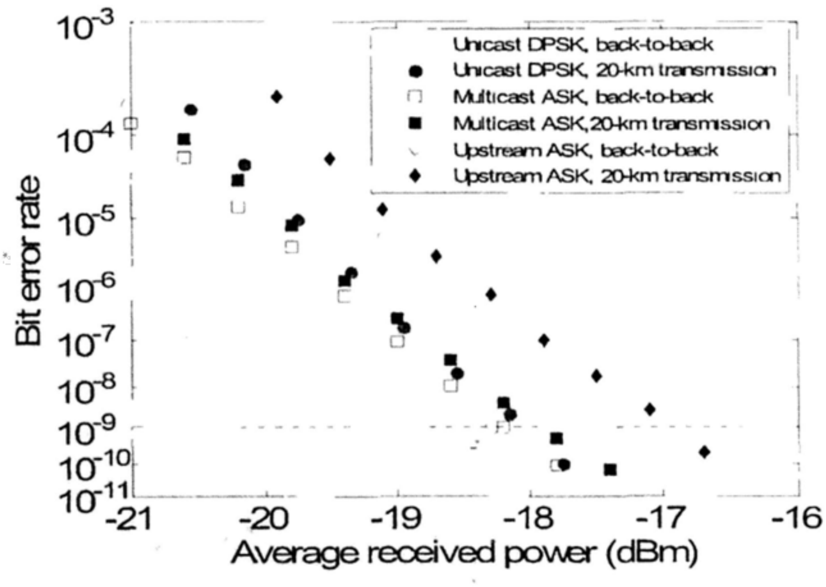

Fig. 3.27 BER measurements with multicast enabled when the control clock frequency is 20-GHz.

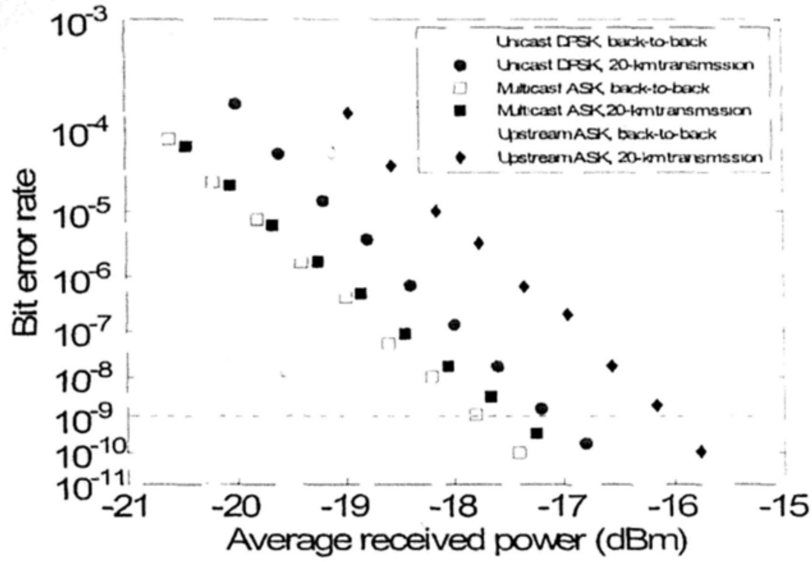

Fig. 3.28 BER measurements with multicast enabled when the control clock frequency is 15-GHz.

As shown in Fig.3.23, the system architecture guarantees no Rayleigh backscattering (RB) effect in the feeder fibers, as the upper feeder fiber has only unidirectional signal transmission, while the lower one has bi-directional signal transmissions, but on different wavelengths. However, in practice, due to non-ideal separation of the two generated optical sub-carriers at the OLT, the residual spectra would lead to possible wavelength overlapping or crosstalk in the lower feeder fiber. This wavelength overlapping between the optical sub-carriers would introduce possible RB. We have characterized such residual RB in our experiment under three values of the control clock frequency at the OLT, and the results were tabulated in Table 3.2. The residual

Control clock frequency at OLT	Rayleigh Backscattering (dB)	
	Upstream	Multicast
15 GHz	0.32	0.30
20 GHz	0.30	0.28
30 GHz	0.28	0.25

Table 3.2 Residual Rayleigh backscattering

RB for all the three condition were less than 0 32 dB both for the multicast and the upstream transmissions, which implied negligible RB in our scheme This was due to the relatively low power in the wavelength overlapping component

3.4.5 Simultaneous transmission of two sets of multicast data

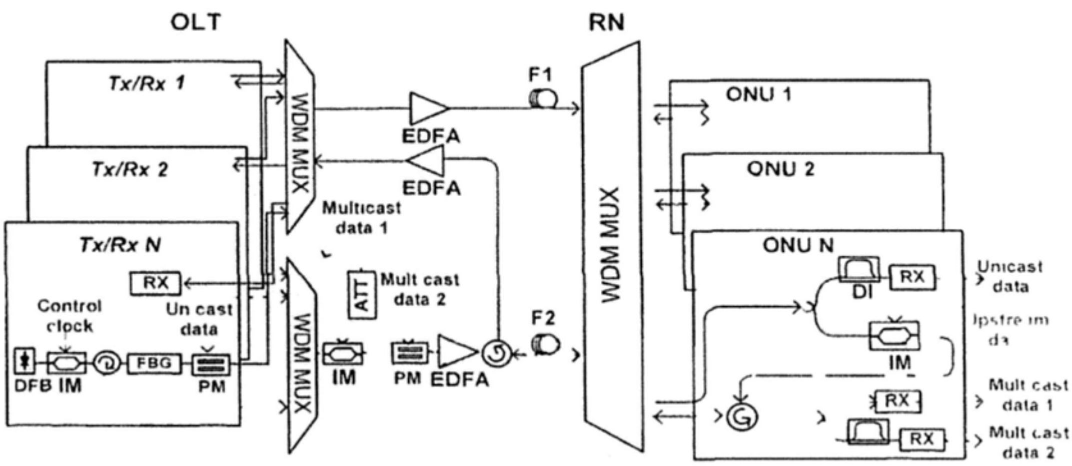

Fig 3 29 A WDM-PON with an overlay scheme to realize simultaneous transmission of two sets of multicast data F1 & F2 fiber feeders, FBG fiber Bragg grating, IM optical intensity modulator, EDFA Erbium doped fiber amplifier, DI delay interferometer

In this section, we extend our scheme to realize simultaneous multicast transmission of two sets of data streams over a WDM-PON Fig 3 29 depicts the WDM-PON with an optical overlay scheme to support two sets of multicast data Compared with the scheme, illustrated in Fig 3 23, we further superimpose the second set of multicast data in DPSK format (multicast data 2), via orthogonal modulation technique, onto the first set of multicast data in ASK format (multicast data 1) An additional PM is employed after the multicast IM modulator so as to support modulation of the second set of multicast data in DPSK format In order to realize the simultaneous transmissions of the two multicast data, we add an electrical attenuator and switch to control the extinction ratio (ER) of the multicast data 1. When the ER of the multicast data 1 (ASK), is reduced, the multicast data 2 (DPSK) modulated on the multicast data 1 (ASK) can be successfully demodulated and thus simultaneous transmission is enabled. On the other hand, when the ER of the multicast data 1 is set to be higher than 4.7 dB [83], the multicast data 2 (DPSK) modulated on the multicast data 1 (ASK), can no longer be properly demodulated at the ONU, due to the excessive induced intensity fluctuation, thus multicast data 2 is disabled.

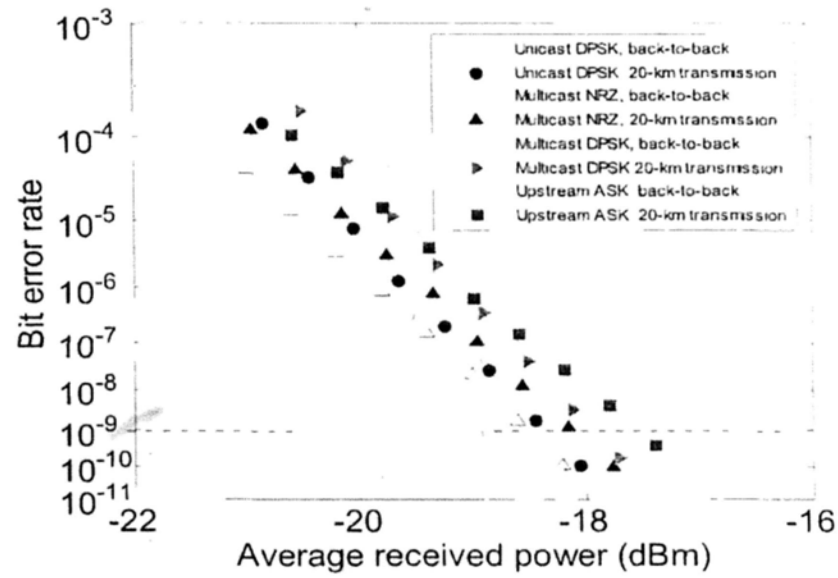

Fig. 3.30 BER measurements when single multicast is enabled.

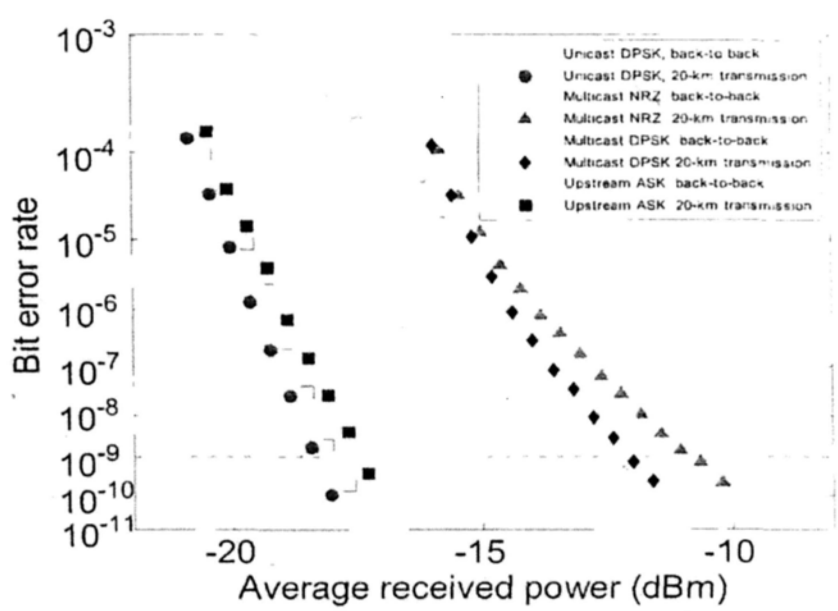

Fig. 3.31 BER measurements when two multicasts are enabled.

Fig. 3.30 shows the BER performances when single multicast (either multicast data 1 or 2) was enabled. After 20-km transmission, the power penalties were about 0.4 dB for the downstream unicast transmission and 0.6 dB for both the downstream multicast and the upstream transmissions. Fig. 3.31 shows the BER performances when simultaneous double multicast (both multicast data 1 or 2) was enabled. As compared to the results shown in Fig. 3.30, about 5-dB and 5.5-dB reduction in the receiver sensitivities at 10^{-9} were shown for the multicast DPSK signal (multicast data 2) and the multicast ASK signal (multicast data 1), respectively. The relatively large performance degradation in multicast data 1 (ASK) might be attributed to reduction of its ER from 8.5 dB to 3.1 dB in the experiment, while that in multicast data 2 (DPSK) might be due to the intensity fluctuation induced from multicast data 1 (ASK). However, the simultaneous transmissions of the two sets of multicast data had negligible degradation on both the downstream unicast and the upstream data.

In this section, a novel multicast based on optical carrier suppression technique to generate the optical sub-carrier for the multicast data modulation has been proposed and experimentally investigated. Simple multicast overlay control was performed by setting the presence of the control clock signal at the OLT. As the downstream unicast signal and the upstream signal were carried on different fiber feeders, while the upstream signal and the multicast signal were carried on different subcarriers, though on the same fiber feeder, the possible Rayleigh backscattering effect was much alleviated. Moreover, we have further modified the scheme to alleviate the possible degradation due to phase-to-intensity conversion at the non-ideal passband edge of the FBG and relax the requirement of the control clock frequency for OCS. In addition, we have also successfully demonstrated the simultaneous transmission of two sets of multicast data over the WDM-PON, using orthogonal modulation technique. However, the two sets of multicast data were mutual dependent, which limited the flexibility of the whole system.

3.5 Optical overlay of two independent multicast streams on a WDM-PON

In the last section, we have first tried to overlay two multicast streams onto a WDM-PON, which is believed to further enrich the capability of the whole network with increased network flexibility, especially for the future network application when more than one multicast data streams are needed. However, the scheme proposed can only support two dependent multicast data streams, which have close relationship. In this section we will propose a WDM-PON system that can simultaneously support two independent multicast streams.

3.5.1 Introduction

In this part, for the first time, we propose and demonstrate a novel WDM-PON which can simultaneously support two independent multicast data streams, in addition to the conventional two-way unicast transmissions. No additional light sources are required for the additional multicast data stream and ONUs are kept colorless and cost effective. The control of the multicast transmissions is achieved by controlling the clock signal for optical tone generation as well as an optical switch at the OLT with the objective to control the power source generation for different kinds of data transmissions, including downstream unicast, multicast and upstream data transmissions. The proof-of-concept experiment of 10-Gbit/s transmissions for all unicast and multicast data has been carried out.

3.5.2 Proposed system architecture

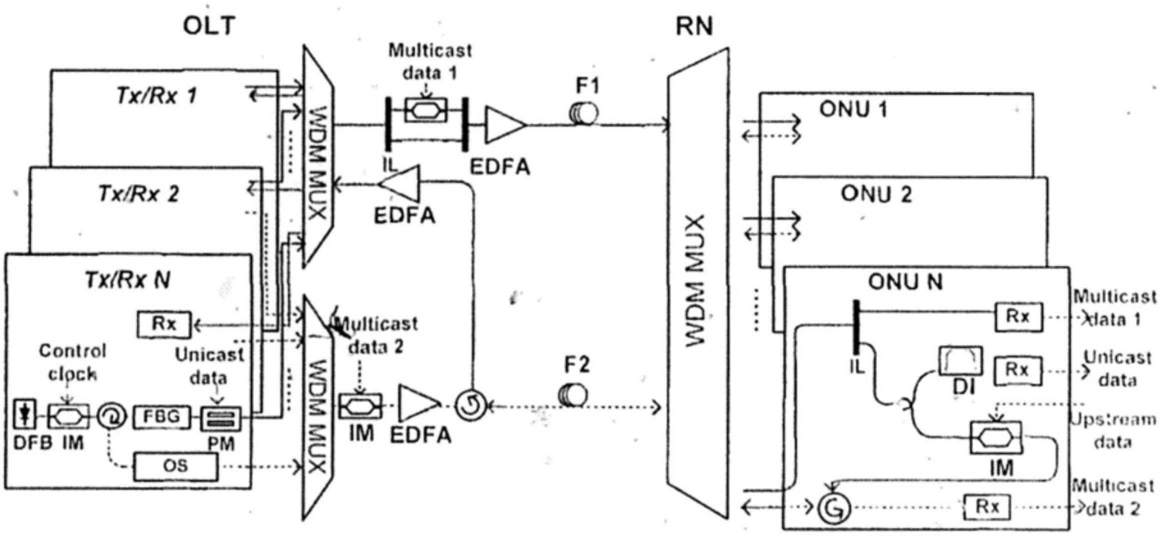

Fig. 3.32 Proposed WDM-PON with multicast overlay supporting two independent multicast streams. IL: optical interleaver; MUX/DEMUX: wavelength multiplexer/ demultiplexer; OS: optical on/off switch.

Fig. 3.32 depicts the proposed WDM-PON architecture with N optical network units (ONUs), delivering two independent multicast data streams, labeled as "Multicast data 1" and "Multicast data 2". At the OLT, the continuous-wave (CW) light from each transmitter is first modulated by a clock signal, via a Mach-Zehnder intensity modulator (IM), biased at the quadrature point to generate three optical tones. The generated tones are then fed into a fiber Bragg grating (FBG), where one of the generated tones is filtered off and reflected into the optical switch, which is used as to control the on-off of the multicast data stream (Multicast data 2). All of the optical tones for Multicast data 2 from all transmitters at the OLT are combined, via a WDM multiplexer, before being fed into a common optical intensity modulator (IM) for ASK modulation of the Multicast data 2. The composite signal is then delivered over the fiber feeder (F2) and de-multiplexed at the remote node (RN) before being detected at their respective destined ONUs. On the other hand, the two optical tones present at the transmission output ports of the FBG at each transmitter are phase-modulated by the respective downstream unicast data in DPSK format, before being combined via a WDM multiplexer. The combined signal is then fed into an optical subsystem comprising a pair of optical interleavers (IL) with an IM being placed in the upper arm and an optical attenuator in the lower arm, as illustrated in Fig. 3.32. In the upper arm, due to the periodic spectral response of the ILs, the set of central tones from all transmitters are extracted from the input combined signal, for common modulation of the Multicast data 1, via the IM. At the same time, the lower arm passes the optical tones carrying the individual unicast DPSK data which are attenuated to lower their influence onto the Multicast data 1. This interference comes from the residual power in the inset iv of Fig. 3.34 mainly due to the non-ideal filtering effect of FBG 2 in Fig. 3.34.The combined signal is then delivered to the RN, via fiber feeder (F1). After being demultiplexed at the RN, the optical tones for unicast and two multicast data streams are delivered to their respective destined ONUs. At each ONU, the received optical tone carrying the Multicast data 1, is separated from that carrying the unicast data, via an IL. Part of the received unicast DPSK data signal is demodulated, via an optical delay interferometer (DI), before being directly detected, while the rest of the optical power is fed into an IM for upstream ASK data modulation before being delivered back to the respective receiver unit at the OLT, via the fiber feeder (F2). Since the same ILs can be used for all ONUs, the ONU remains colorless. As the downstream unicast signal and the upstream signal are carried on different fiber feeders, while the upstream signal and the multicast signals are carried on different optical tones, though on the same fiber feeder, the possible Rayleigh backscattering effect is much alleviated.

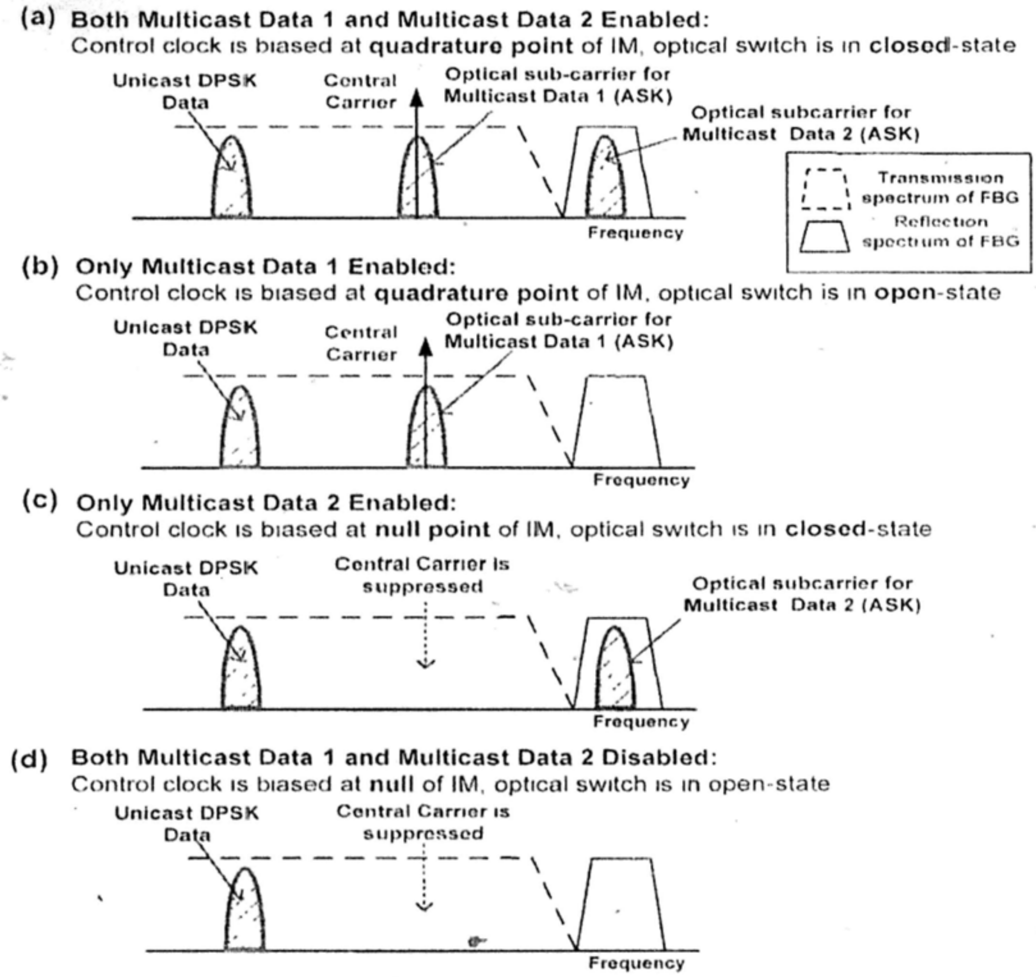

Fig. 3.33 Spectra of downstream carrier to illustrate the principle of multicast overlay fiber control via control clock and optical switch.

The control of multicast transmissions for individual downstream channel is achieved by setting the bias condition of the IM driven by the control clock signal, as well as setting the state of the optical switch, at the respective transmitter at the OLT, as illustrated in Fig. 3.33. When the control clock is biased at the quadrature point of the IM and the optical switch is in closed-state, the optical tones for the two multicast data and the unicast data are generated, as shown in Fig. 3.33(a). Hence the simultaneous delivery of the two multicast data streams is realized. When the control clock is biased at the quadrature point of the IM and the optical switch is in open-state, only the transmission for Multicast data 1 is enabled, while the optical tone reflected by the FBG is blocked by the optical switch, thus disabling the transmission for Multicast data 2, as depicted in Fig. 333(b). When the control clock is biased at null point of the IM and the optical switch is set in closed-state, the central tone is suppressed, thus Multicast data 1 is disabled, as shown in Fig. 3.33(c), while only Multicast data 2 is transmitted. When the control clock is biased at null point of the IM and the optical switch is set in open-state, the central tone is suppressed and the optical tone reflected by the FBG is blocked by the optical switch, as depicted in Fig. 3.33(d). Hence, both of the two multicast data streams are disabled.

3.5.3 Experimental demonstration

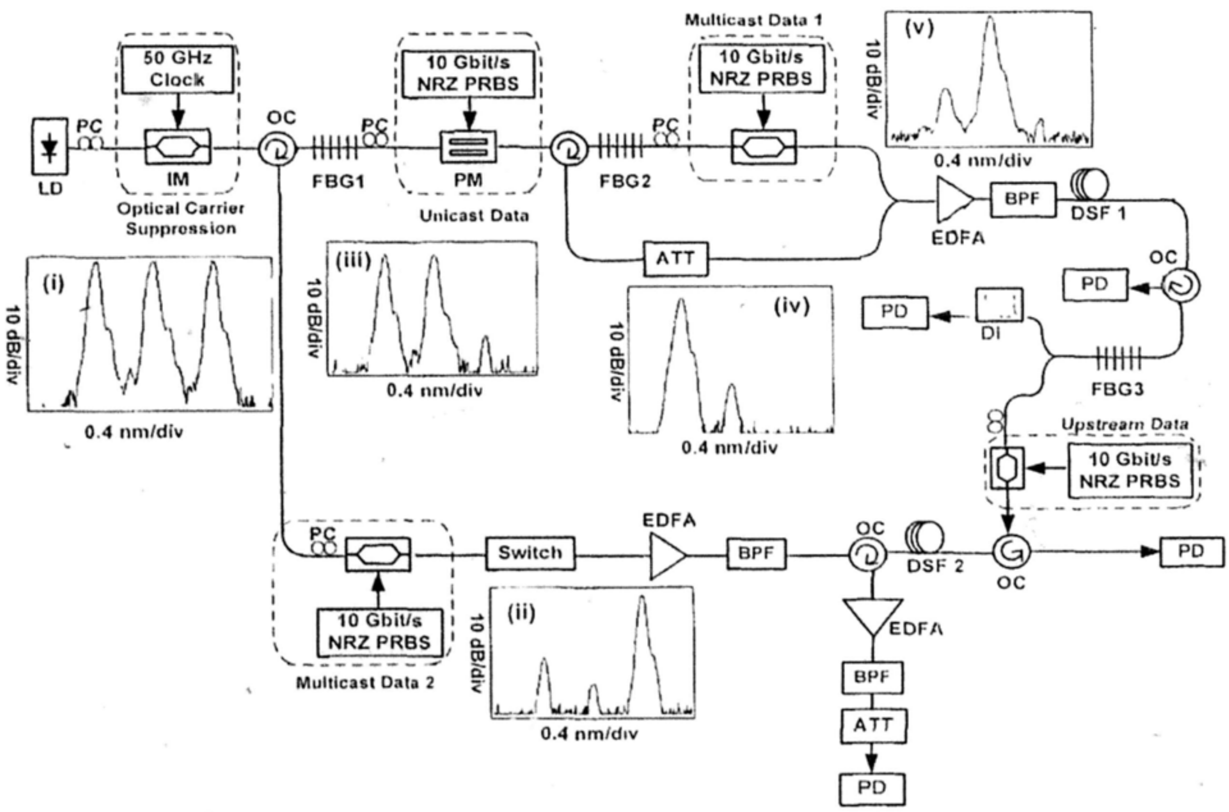

Fig. 3.34 Experimental setup. Insets show the (i) output spectrum of the IM; (ii) reflected spectrum of FBG1 (i.e. Multicast data 2); (iii) transmitted spectrum of FBG1; (iv) spectrum for unicast data; (v) spectrum for Multicast data 1. OC: optical circulator, BPF: bandpass filter, ATT: attenuator.

Fig. 3.34 shows the set-up of our proof-of-concept experiment for the independent control of the two multicast signals. A CW light at 1547.29 nm was first fed into a 40-Gb/s optical IM, driven by a 50-GHz clock to create three optical tones, λ_{sub1} at 1546.89 nm, λ_{sub2} at 1547.29 nm and λ_{sub3} at 1547.69 nm, as in Fig. 3.34 inset (i). They were then fed into FBG1 with a reflection passband of 0.2 nm full width at half maximum (FWHM) and a reflectivity of 99%, so as to separate out the carrier λ_{sub3}, as in Fig. 3.34 inset (ii). λ_{sub3} was then reflected into an IM, where it was intensity modulated by the 10-Gb/s 2^{31}-1 Pseudo Random Binary Sequence (PRBS) NRZ Multicast data 2 before being amplified to about 3 dBm and delivered on a piece of 20-km dispersion-shifted fiber (DSF) feeder (DSF2). DSF fiber was employed in our experiment just to emulate dispersion compensated fiber feeders. In practical implementation, dispersion compensating module may be used to compensate the fiber chromatic dispersion in the deployed single-mode fiber feeders. At the transmission output port of FBG1, λ_{sub1} and λ_{sub2} as in Fig. 3.34 inset (iii), were modulated by the 10-Gb/s 2^{31}-1 PRBS unicast data, via the optical phase modulator (PM) and separated by the FBG2 with a reflection passband of 0.2 nm (FWHM) and a reflectivity of 99%. The optical tone λ_{sub2}, as in Fig. 3.34 inset (v), was intensity modulated by the 10-Gb/s 2^{31}-1 PRBS NRZ Multicast data 1 before being combined with λ_{sub1}, as in Fig. 3.34 inset (iv). The composite signal was then optically amplified to about 5 dBm before being delivered to the ONU, via another piece of 20-km DSF fiber feeder (DSF1). At the ONU, Multicast data 2 on λ_{sub3} was directly detected, while the Multicast data 1 on λ_{sub2} was separated from λ_{sub1} and detected. The unicast DPSK data on λ_{sub1} was 3-dB split, half for reception and half for upstream re-modulation by the 10-Gb/s 2^{31}-1 PRBS NRZ upstream data, via another IM. The upstream ASK signal was then sent back to the OLT, via DSF2, before it was separated from the downstream signal and detected.

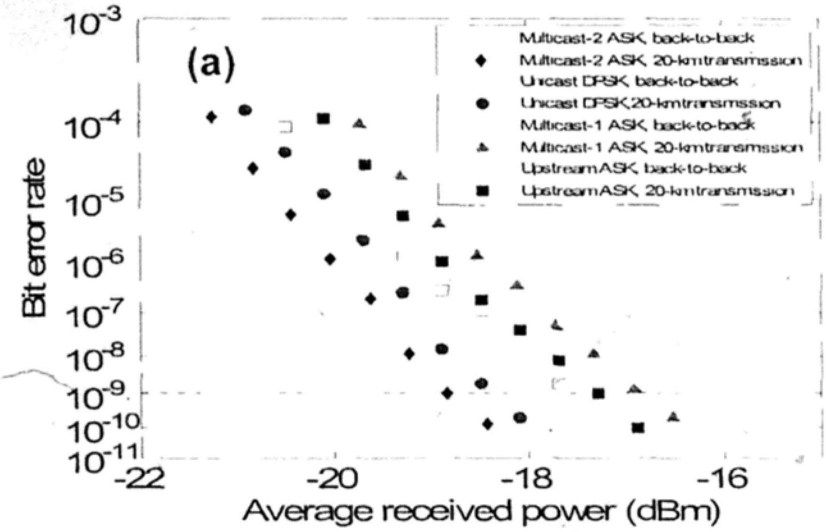

(a)
Multicast-2 ASK, back-to-back
Multicast-2 ASK, 20-km transmission
Unicast DPSK, back-to-back
Unicast DPSK, 20-km transmission
Multicast-1 ASK, back-to-back
Multicast-1 ASK, 20-km transmission
Upstream ASK, back-to-back
Upstream ASK, 20-km transmission
Bit error rate
Average received power (dBm)

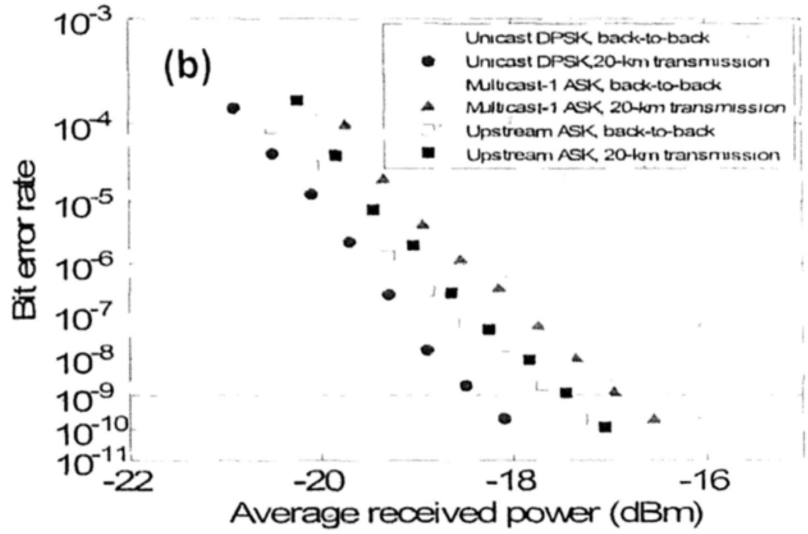

(b)
Unicast DPSK, back-to-back
Unicast DPSK, 20-km transmission
Multicast-1 ASK, back-to-back
Multicast-1 ASK, 20-km transmission
Upstream ASK, back-to-back
Upstream ASK, 20-km transmission
Bit error rate
Average received power (dBm)

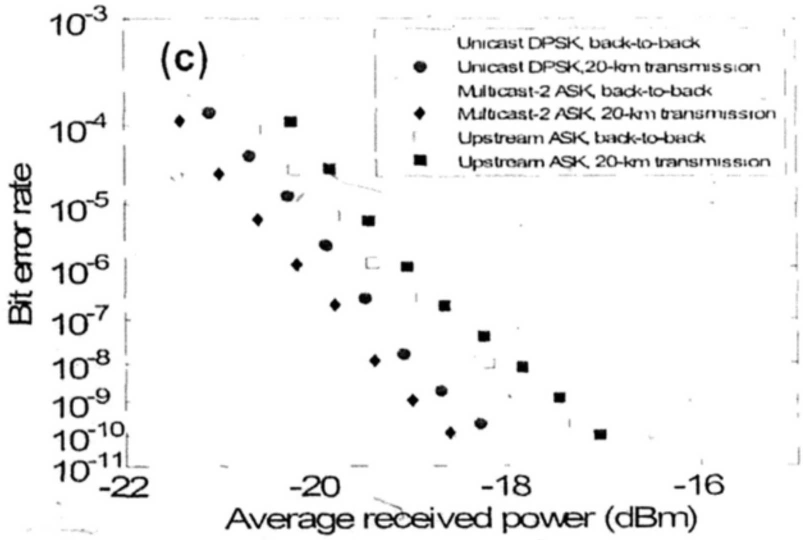

(c)
Unicast DPSK, back-to-back
Unicast DPSK, 20-km transmission
Multicast-2 ASK, back-to-back
Multicast-2 ASK, 20-km transmission
Upstream ASK, back-to-back
Upstream ASK, 20-km transmission
Bit error rate
Average received power (dBm)

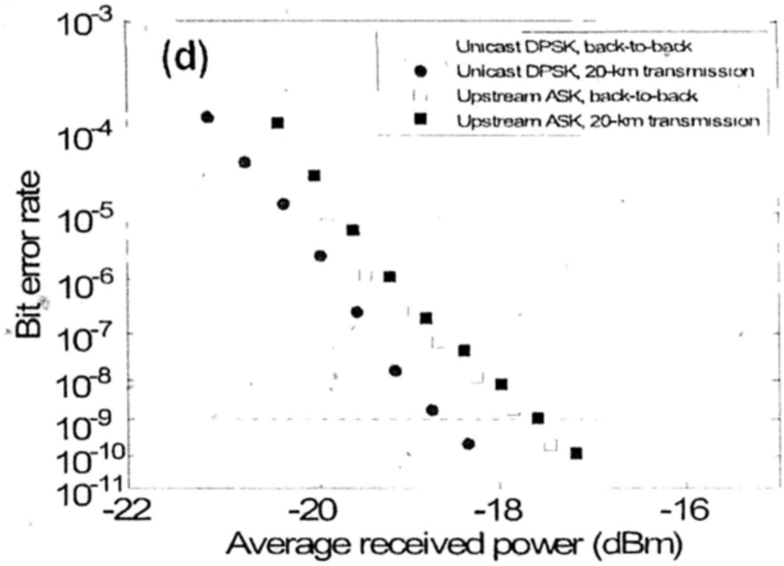

Fig. 3.35 BER measurements of 10-Gb/s transmissions. (a) both two multicast data streams are enabled; (b) only multicast data 1 is enabled; (c) only Multicast data 2 is enabled; (d) both multicast data streams are disabled.

The bit error rate (BER) performances of different data streams have been measured. Fig. 3.35(a) shows the measured BER performances when both of the two multicast data streams were enabled. Less than 0.5-dB penalty was observed for the unicast, the multicast and the upstream data after transmission. Fig. 3.35(b), (c) and (d) show the BER performances when only Multicast data 1, only Multicast data 2, and no multicast data, were enabled, respectively. When compared the BER plots of both of the downstream unicast and the upstream data as depicted in Fig. 3.35(d), with those depicted in Fig. 3.35(a)-(c), it was observed that negligible power penalty was induced to the downstream unicast and the upstream data in the presence of either one or both multicast data streams. This might be attributed to the fact that the individual data streams were carried on different optical sub-carriers, thus avoiding the interference among them. The varied performances of different kind of data streams were due to the imperfect filtering of the FBGs used in the experiment.

3.5.4 Discussion

In this thesis, we have successfully overlaid two independent multicast data streams on to a WDM-PON by generating subcarriers. Then can we expand the system to support more mutually independent multicast data streams by generating multiple subcarriers as in the above scheme or what is the limitation for the number of the multicast data streams? In order to make our analysis more reasonable, we assume the network environment is the same as Fig. 3.32, including the similar system architecture except for more subcarriers are generated, which needs more modulators at the OLT and receivers at the ONUs. We assume that the multicast streams are balanced on two transmission links, one for half of the multicast data streams and the power is amplitude to P dBm after the EDFA and before delivered to RN, in the experiment P = 5. We also assume the insertion losses of AWG, DI, OC, IL, and 20-km transmission are L_{AWG} , L_{DI} , L_{OC} , L_{IL} and Loss, which are 5 dB, 5 dB, 1 dB, 3.5 dB and 5 dB respectively in the experiment. Cascaded ILs are used to separate the subcarriers at the ONU for data reception. Therefore the worst case is the N^{th} subcarrier delivered through the upper transmission link after passing 20 km, AWG at the RN, (Log_2N+1) stages ILs at the ONU before direct detection. We assume the receiver sensitivity is Rev for multicast data channel. Therefore the number N of multicast channel must satisfy the worst case stated above:

$$P - Loss - L_{AWG} - L_{IL} \cdot [\log_2(N) + 1] \geq \mathrm{Re}v \tag{9}$$

Thus the $N \leq 5$ in our experimental condition, considering the receiver sensitivity for multicast data at 10^{-9}, which implies we can simultaneously support four mutual independent multicast data streams in our experiment. Besides the power budget for downstream transmission, system cost should also be carefully considered, especially for the ONU, whose cost can not shared by other subscribers. Another limitation factor is the complexity of the system, due to the use of additional modulators, ILs and detectors Moreover, bandwidth for a channel in WDM-PONs can only support limited number of subcarriers

Orthogonal frequency division multiplexing (OFDM) [84] may be a promising candidate to support multiple multicast data streams, as multi-carriers are used in the technique OFDM signal has narrower spectrum compared with conventional modulation technique such as ASK In addition, one OFDM receiver is needed at the subscriber for multi-carrier reception, which can simplify the system cost and complexity However, a subcarrier tone can only carry low-rate data, and the received need off-line processing, which may limit the transmission and processing speed of the system

3.6 Summary

In this chapter, we have first reviewed several typical multicast enabled architectures, which can be divided into three categories in terms of mechanism of realizing multicast data transmission, including overlay scheme based on additional light sources [57], overlay schemes utilizing subcarrier multiplexing [58-60], and overlay schemes using the orthogonal modulation formats [61-63] Using additional light sources could support additional multicast, but the system cost would be greatly increased [57] The SCM based schemes requiring no additional light sources realized the centralized control for multicast transmission at the OLT and were highly compatible to the existing broadcast systems, since the subcarrier multiplexing system was well-developed [58-60] However, the transmission speed of the subcarrier modulated signal in a SCM based system was limited due to the processing speed of electrical devices used in the SCM module. The schemes using orthogonal modulation formats could increase the data rate, but the performance of unicast data was sacrificed since the multicast data would be superimposed onto them and their ER remained low [61-63].

In order to improve the system performances while keeping the advantages in [57-63], such as no additional light sources, centralized multicast control, and high speed transmission, we have proposed our own schemes to overlay multicast onto a WDM-PON: 1) A WDM PON network with polarization-assisted multicast overlay control and its variant; 2) An optical multicast overlay scheme using optical sub-carriers; 3) optical overlay of two independent multicast streams on a WDM-PON. In the polarization-assisted multicast enabled architecture and its variant, by the cross-use of wavelengths, a separate path was provided for the multicast data from downstream point-to-point data without additional light sources, which guaranteed the transmission performances in for both multicast and point-to-point signal, but the system might suffer a lot from the Rayleigh Backscattering effect because same wavelengths were delivered on the same link although in different directions. In the multicast overlay scheme using optical sub-carriers, by employing optical carrier suppression technique at each downstream optical transmitter at the OLT, two coherent optical sub-carriers were generated to carry the 10-Gb/s downstream unicast DPSK signal and the 10-Gb/s downstream multicast ASK signal, separately without any additional light sources. As the downstream unicast signal and the upstream signal were carried on different fiber feeders, while the upstream signal and the multicast signal were carried on different optical sub-carriers, though on the same fiber feeder, the possible Rayleigh backscattering effect was much alleviated. However, the system failed to support two independent multicast data streams simultaneously. In last scheme, by controlling a sinusoidal clock signal and an optical switch at the optical line terminal (OLT), the delivery of the two multicast data, being carried by the generated optical tones, could be independently and flexibly controlled.

As shown in Table 3.3, we have compared all the multicast schemes mentioned in this chapter in terms of data rate, electrical device usage and performance tradeoff, etc.

	Data rate	Centralized control	Upstream remodulation	Unicast sacrifice	No. of multicast
Scheme with extra source [57]	2.5-Gb/s	Yes	Yes	No	1
SCM based scheme (1) [58]	1.25-Gb/s & 155-Mb/s	Yes	No	Yes	1
SCM based scheme (2) [59]	1.25-Gb/s	Yes	Yes	Yes	1
SCM based scheme (3) [60]	2.5-Gb/s	Yes	Yes	No	1
IRZ/DPSK scheme [61]	10-Gb/s	Yes	Yes	No	1
IRZ/ASK scheme [62]	2.5-Gb/s	Yes	No	Yes	1
ASK/DPSK scheme [63]	10-Gb/s	Yes	No	Yes	1
Polarization-assisted	10-Gb/s	Yes	Yes	No	1
Switch-assisted	10-Gb/s	Yes	Yes	No	1
Based on OCS	10-Gb/s	Yes	Yes	No	1
Supporting two multicast streams	10-Gb/s	Yes	Yes	No	2

Table 3.3 Comparison of different multicast schemes

Notably, all the multicast-enabled schemes have realized centralized multicast control in the central office or at the OLT, guaranteeing an effective implementation and convenient management, which could also reduce the maintenance cost. Besides, all the multicast schemes except [57], needed no additional light sources for multicast transmission. For the transmission data rate of the systems, the data rates for the SCM based schemes [58-60] and scheme using IRZ/ASK [62] were remained as low as 2.5 Gb/s compared with other schemes using orthogonal modulation formats [61,63] and our proposed schemes. These were mainly because the limited transmission speed for SCM system in [58-60] and strong crosstalk between IRZ and ASK in [62]. In addition, in all the SCM based schemes and orthogonal modulation formats based schemes [62-63], the ER of unicast data were reduced to carry the multicast data, therefore there was the performance sacrifice for unicast signals. However, in our proposed systems, multicast data were carried onto a different transmission link from the unicast data, either by the cross-use of the downstream wavelengths or using sub-carriers modulation. Considering the cost for the WDM-PON system, especially the complexity and cost for the ONUs, colorless-ONU schemes are attractive by making all ONUs in the same module, which lows the cost of manufacturing. Moreover, a colorless ONU requires no light source for upstream transmission, which not only lower the cost of the ONU but also easier the monitoring of it, since no temperature or current control is needed for the laser sources. A typical way to realize a colorless ONU is to remodulate the downstream power for upstream transmission, marked as upstream remodulation. In all the schemes, only schemes in [58, 62-63] failed to realize colorless ONUs, mainly due to modulation formats in the schemes. In the term of system complexity, most schemes realized colorless ONUs and required one optical modulator at the OLT, except the schemes for two multicast data streams. One more modulator was needed for the second multicast stream and some optical interleavers were for sub-carriers division. Except all the difference mentioned above, our last scheme has first successfully overlay two independent multicast streams onto a WDM-PON, and system was analyzed expandable to support four independent multicast streams at most, which was believe to further increase the network capability.

Chapter 4

Survivable architectures for WDM-PONs

4.1 Introduction

WDM-PONs have now been considered as an attractive and promising approach to provide broadband services to a large number of subscribers in optical access networks, with the recent availability of low-cost commercial optical components. The broadband demands have increased sharply both in enterprise and residential sides with the increasing popularity of the Internet-based applications, such as multimedia and interactive services, which makes the whole network more and more data-centric, and any component or link failure may cause huge loss of data or even business. However, in a conventional WDM-PON, each ONU communicates with the central office with a dedicated set of wavelength channels. This structure has more networking capability compared with some time-division-multiplexed PON, such as E-PON [4] or G-PON [5], but can only provide limited protection feature. Therefore, how to increase the networking survivability [20, 85] has become an intensively-discussed issue in WDM-PON architecture design, since highly available and reliable data transmissions are required in nowadays networks even in some unpredicted scenarios, such as fire or flooding.

Fault management is a crucial issue to realize the networking survivability in an optical network. Some conventional approaches to fault management are based on diagnosis in higher layers [86], in which status reports collected from various checkpoints are used for network management. However, this kind of high-layer fault management imposes excessive overhead in network management and lowers the signal processing speed. Thus in order to facilitate the system effectiveness in network protection, survivability is supposed to be realized in optical layer by simple fiber link or equipment duplication with protection switching or some other schemes with resources reservation for protection. Considering the relatively long time to repair a fiber cut, a survivable PON architecture with protection switching against any fiber cut is highly desirable. Such protections on optical layer can guarantee a short distortion time as short as tens of milliseconds, and reduce the amount of data loss during service disturbing.

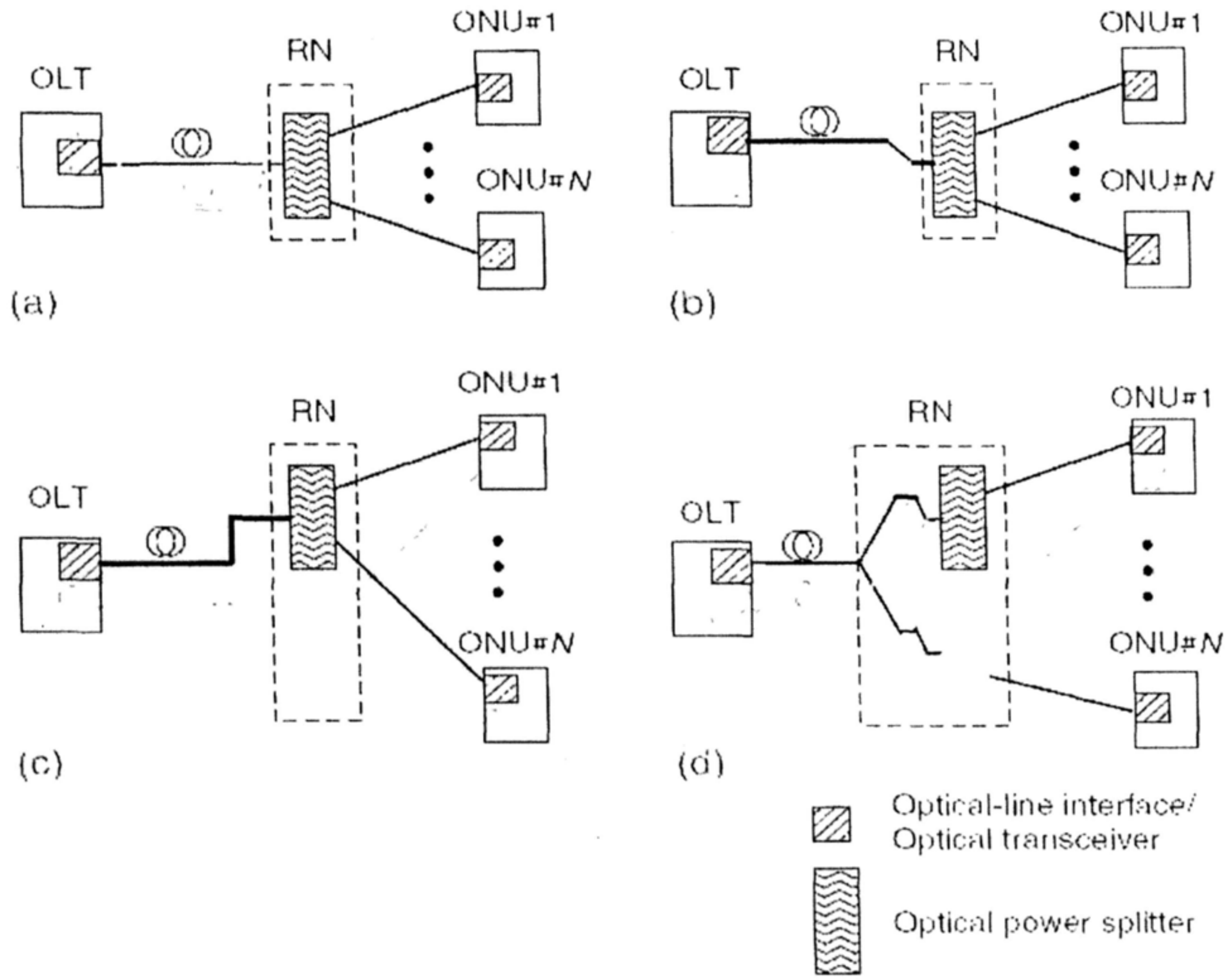

Fig. 4.1 Survivable architectures for PONs suggested by ITU-T G.983.1 [5]

ITU-T G.983.1 has suggested four protections architectures for conventional tree-topology PON system with different protection level as shown in Fig. 4.1 [5]. The basic idea is to duplicate fiber links and/or components for protection. Fig. 4.1(a) protects the feeder fiber by only duplicating it, while Fig. 4.1(b) additionally doubles the transceivers for the backup transmission. In Fig. 4.1(c), optical transceivers both at the OLT and the ONU are duplicated as well as the transmission links including feeder fibers and distribution. In addition, the optical power splitters at the remote node (RN) are also doubled. In this way, any failure in either optical component or fiber link can be recovered. The architecture demonstrated in Fig. 4.1(d) is similar to that in Fig. 4.1(c) except for an additional power splitter circuit located at the RN to protect the ONUs without duplicated optical transceivers.

WDM-PONs have inherent the structure characteristics of PON system as well as the protection mechanisms used in PONs. In this chapter, we will first review several typical survivable architectures for WDM-PONs, which realize protections in optical layer. Then we will propose our own survivable WDM-PON architecture using optical carrier suppression technology. After that, we will further discuss the survivability issue in wavelength division multiplexing/time division multiplexing (WDM/TDM) hybrid network, which is attractive as it can further increase the network reach, transmission capacity, and reduces the cost per subscriber compared with WDM-PONs, and propose a self-protected WDM/TDM PON architecture using a ring topology to connect the subscribers. Finally, we will provide a comprehensive comparison on all the proposed schemes in this topic.

4.2 Previous survivable WDM-PON architectures

WDM-PON is an attractive solution to realize optical broadband access. In order to avoid enormous loss in data and business due to any possible fiber cuts, survivable network architecture is highly desirable. Recently, several survivable architectures [64-71, 72-79] have been proposed to provide protection and restoration functions in WDM-PONs. The common principle to achieve the survivability is to flexibly realize the light path diversity by adopting alternate light path routing of the wavelength channels on the existing network architectures to bypass the failed fiber links for protection with minimal duplicated resources. The network topology, which decides the physical paths or connections between OLTs and ONUs, actually determines the light path diversity in a WDM-PON. Therefore, the previous schemes are sorted into two categories according to the network topology: tree topology [64-71], and ring topology [72-79].

4.2.1 Survivable architectures with tree topology

Tree topology is a popular network topology adopted in a WDM-PON, in which each ONU communicates with the OLT via a dedicated set of wavelengths for downstream and upstream transmissions, and wavelength routing is realized by a wavelength multiplexer located at the RN. Therefore, the WDM-PON with tree topology can employ the protection structures shown in Fig. 4.1, except that the power splitter is replaced by a wavelength multiplexer at the RN. In this section, we will review several survivable architectures with tree topology, which are divided into two categories according to the different protection mechanisms: architectures utilizing group protection mechanism [64-68] and the ones utilizing AWG cyclic property [69-71].

4.2.1.1 Architectures utilizing group protection mechanism

Fig. 4.2 shows a survivable architecture for WDM-PONs employing group protection mechanism, in which two adjacent ONUs were grouped to provide mutual protection against any failure happened in the distribution fibers [64].

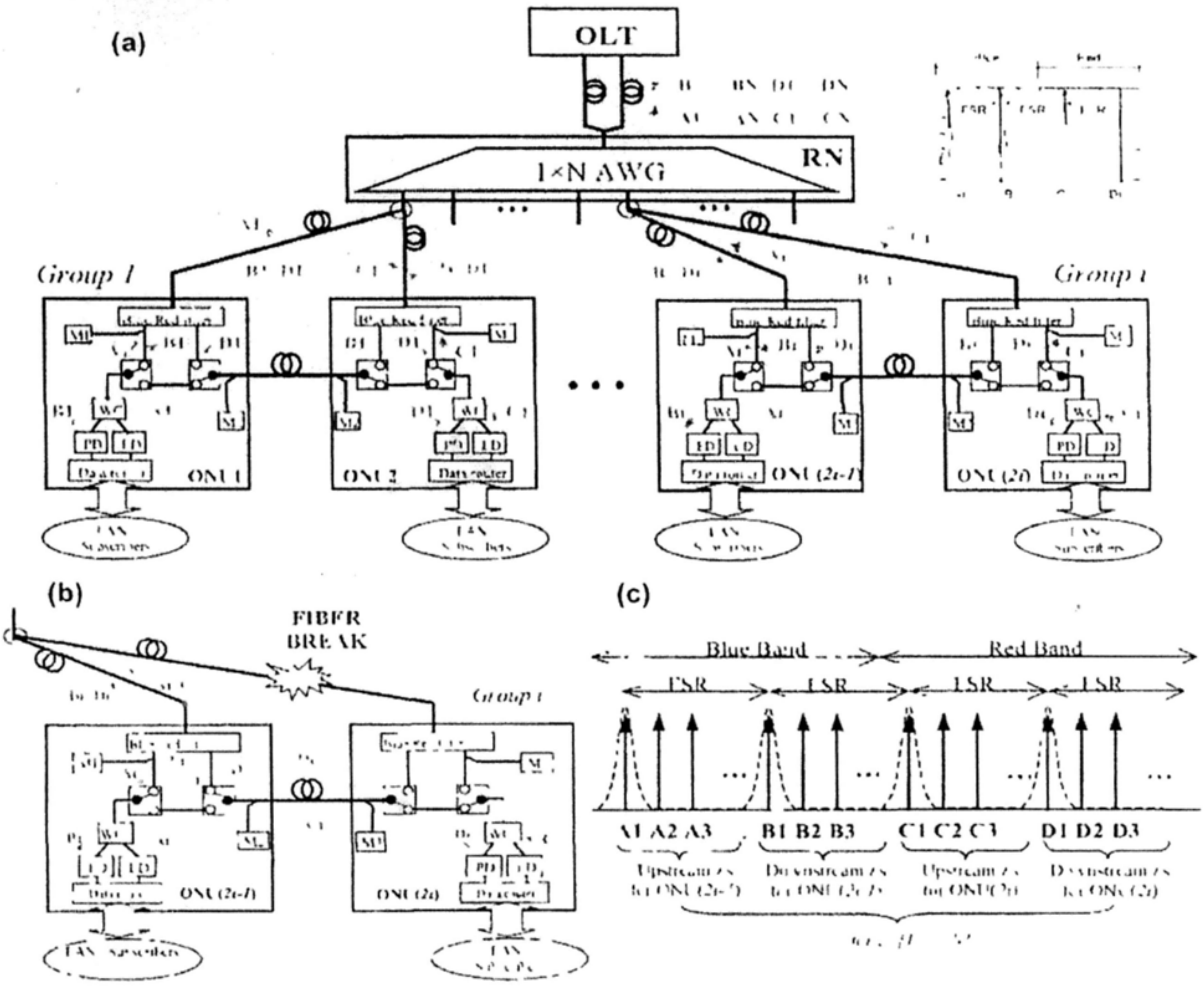

Fig. 4.2 A survivable architecture for WDM-PONs using group protection at the ONU and its wavelength assignment [64]

The two ONUs in the same group were connected to the OLT via the same output port of the AWG at the RN with a piece of protection fiber between them. The same copy of the downstream signals of the group could reach both ONUs with proper wavelength assignment according to the periodical spectral property of the AWG as in Fig. 4.2(c). By the use of the blue red filter, and the pair of protection switches in each ONU together with the protection fiber between, one ONU had preserved a potential transmission link for the other in the same group. In the working mode, the dedicated downstream and upstream wavelength could be routed to its destined receiver with the default setting of the protection switches as shown in Fig. 4.2(a). When there was a fiber cut between a particular ONU and the RN as shown in Fig. 4.2(b), power loss could be detected by the monitoring units in the ONU group, which triggered the states of the protection switches Then the affected downstream and upstream wavelength could be rerouted to the RN via its adjacent ONU on the preserved potential transmission link without disturbing the normal traffic of the adjacent ONU, since OLT still kept connection with it In this way, the ONUs in the same group provided mutual protection to each other and the OLT was kept transparent to such fiber failure

The same ONU-grouping idea was also employed in the references [65-67], which all have similar architectures compared with that in [64] except for the reduced number of optical couplers needed at the RN by employing a novel wavelength assignment as in [65] or simplified ONU structure with reduced number of optical switches in [66] Different from [64-66], in which the protection switching was realized at the ONU, a survivable architecture proposed in [67] had all protection switching performed at the OLT This so-called centrally controlled structure could greatly convenient the management and maintenance of the network and simply the ONUs

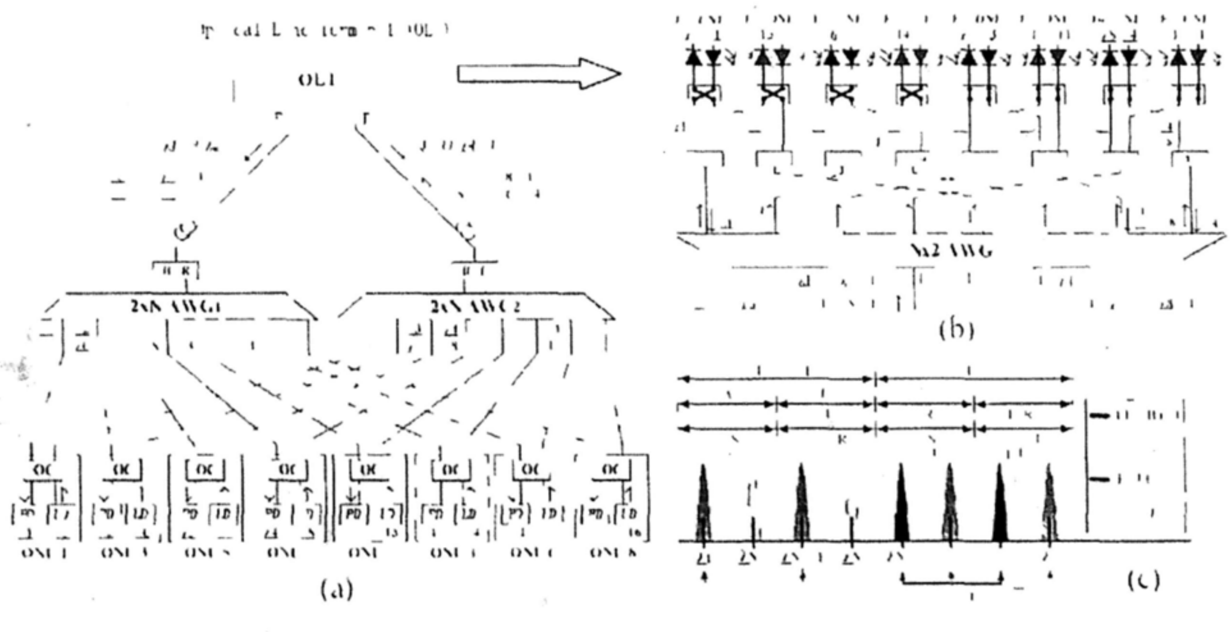

Fig 4 3 A survivable architecture for WDM-PONs using group protection in the OLT and its wavelength assignment [68]

The group protection mechanism could not only be realized at the ONU, but also realized in the OLT. Fig. 4.3 has shown a centrally controlled survivable architecture for WDM PON with group protection performed in the OLT [68]. At the OLT, every two adjacent transceivers, designated for particular ONUs, formed a group via a pair of 2x2 optical switches. By the use of the optical switch as well as the blue red filter, one transceiver alternated the transmission link of the other from its working path to its protection path through the state change of the optical switch with the novel wavelength assignment according to the free spectrum range (FSR) of the AWGs used in the system as shown in Fig. 4.3(c). Whenever a feeder or distribution fiber connected to an ONU was broken, the switching state of the corresponding optical switch at the transceiver would be automatically toggled without affecting any other normal working channels. Except for the group protection mechanism, there were some other typical survivable architectures adopting the cycling property of the AWG used in the system.

4.2.1.2 Architectures utilizing AWG cycling property

A survivable WDM PON with self-protection capability utilizing the cycling property of AWG was shown in Fig. 4.4, proposed in [69]. In this architecture, two WDM PONs using different wavebands were connected together to provide mutual protection. When a fiber failure happened in one network either in feeder or distribution fiber, with the cyclic property of the AWG, the transmission on the failed link could be rerouted to its protection link, which was reserved in the neighboring network. Because of the different wavebands used for two networks, the protection traffic would not affect the normal traffic even carried on the same network. The proposed architecture could successfully provide protection for both feeder and distribution fibers simultaneously. However, the monitoring unit located at ONUs failed to realize centrally-control management, which might make the network management difficult and increase the complexity of ONUs.

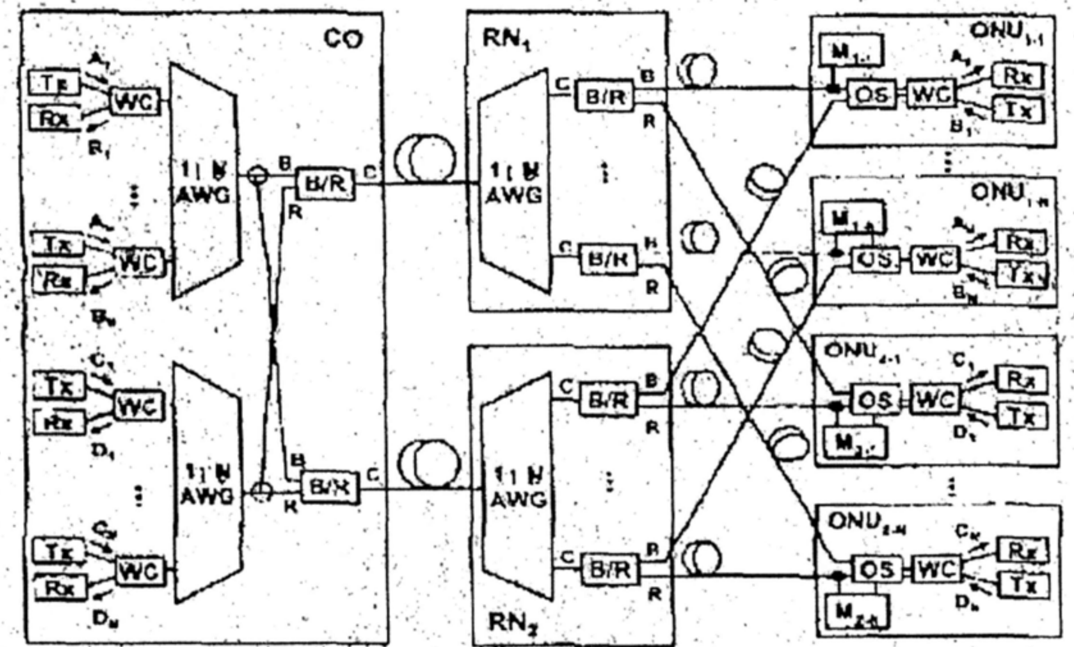

Fig. 4.4 A self-protected survivable WDM-PON in [69]. WC: wavelength coupler, B/R: blue/red filter, OS: optical switch, M: power monitoring unit.

Another reliable WDM-PON architecture providing self-protection was demonstrated in Fig. 4.5 [70]. This architecture utilized the periodical and cyclical property of an *N* x *N* AWG for protection any fiber failure in the transmission link between central office and ONUs including both feeder fiber and distribution fiber cut. The *N* x *N* AWG worked as a combination of two *1* x *(N-1)* AWGs, which simultaneously provided two transmission links between one ONU and central office. In case of the fiber failure, the monitoring unit at the ONU simply toggled the state of optical switch and the affected traffic could be rerouted to the protection link from the failed working link. In order to implement directional transmission, two different wavelength bands, L- and C-bands separated by the multiple of free spectral range of the AWG, were adopted for downstream and upstream transmissions respectively as shown in Fig 4 5(b) Different from all previous schemes, the light sources were provided by two broadband light sources (BLS), L-band BLS for downstream traffic and C-band BLS for upstream traffic Since the two BLS were located at the central office, ONUs were kept colorless, which decreased the costs of operation, administration and maintenance However, the use of BLS limited the data rate of the system

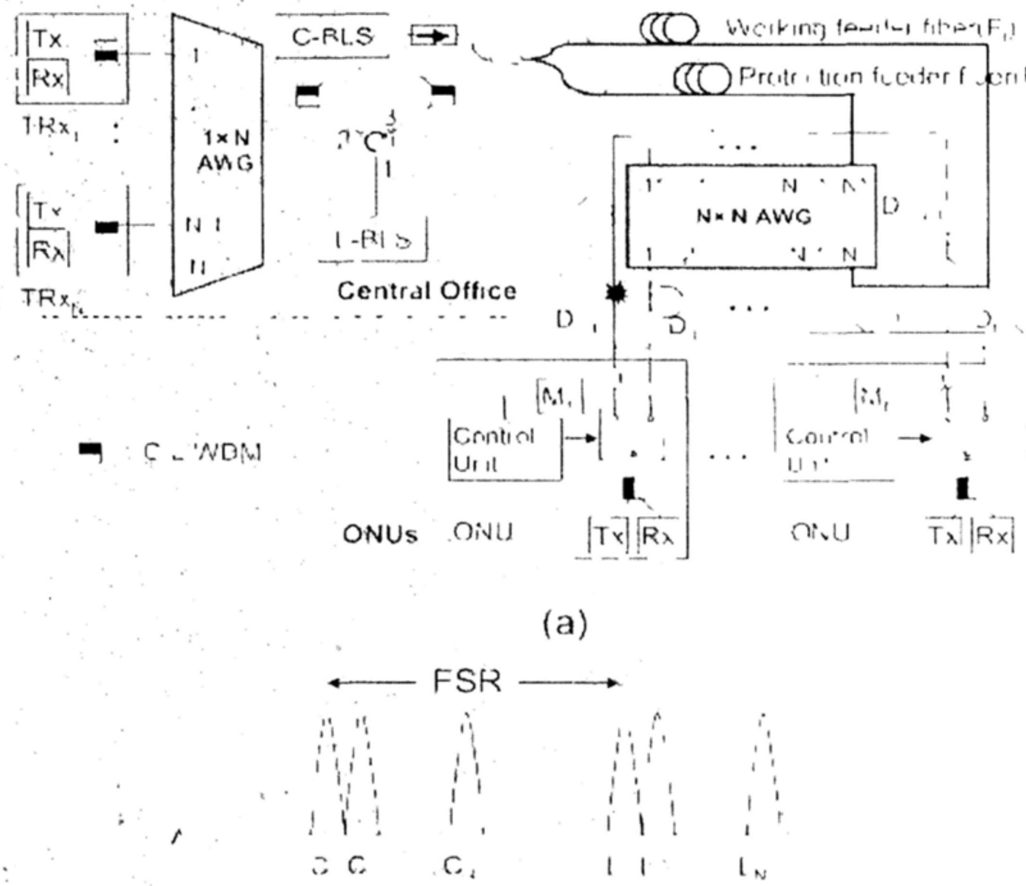

Fig 4 5 Another protection architecture for WDM-PONs and its wavelength assignment plan in [70]

In order to realizing the centrally-controlled protection switching while keeping ONUs colorless, a self-survivable WDM-PON architecture with centralized wavelength monitoring, protection and restoration for both upstream and downstream links was proposed in [71] shown in Fig 4 6 At the central office (CO), all the wavelengths were first fed into a common OCS unit to generate two subcarriers, one for downstream and the other for upstream transmission. Then each wavelength pair was divided into two parts before connected to two different network unit controllers (NUCs). Thus two wavelength pairs, implying two different transmission links, could be provided to each ONU. When a fiber failure was detected, the corresponding NUC would toggle the switch and the AWGs routed the affected traffic to the protection link. Because the light source for upstream was provided by OCS at the CO, the ONU kept colorless. In this paper, OCS was only used for subcarrier generation for transmission. However, many optical interleavers used made the scheme complex although centrally-control was realized with colorless ONUs.

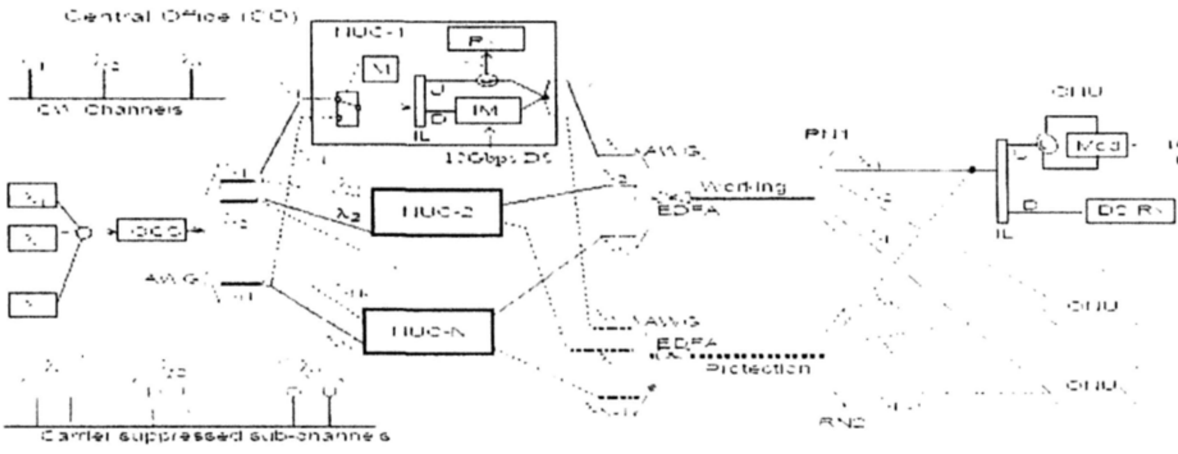

Fig. 4.6 A self-survivable WDM-PON architecture with centralized wavelength monitoring, protection and restoration [71]

4.2.2 Survivable architectures with ring topology

Not only tree topology is employed in a WDM-PON, but ring structure is also considered as a candidate topology for WDM-PONs [29, 87]. Ring structure can provide a good property of protection by duplicating protection fibers to offer redundant paths, and locating path protection switching at both the CO and the subscribers. In this section, we will review some typical survivable architectures employing various types of ring topology to minimize the duplication cost and the system complexity [72-79]

4.2.2.1 Double ring architectures

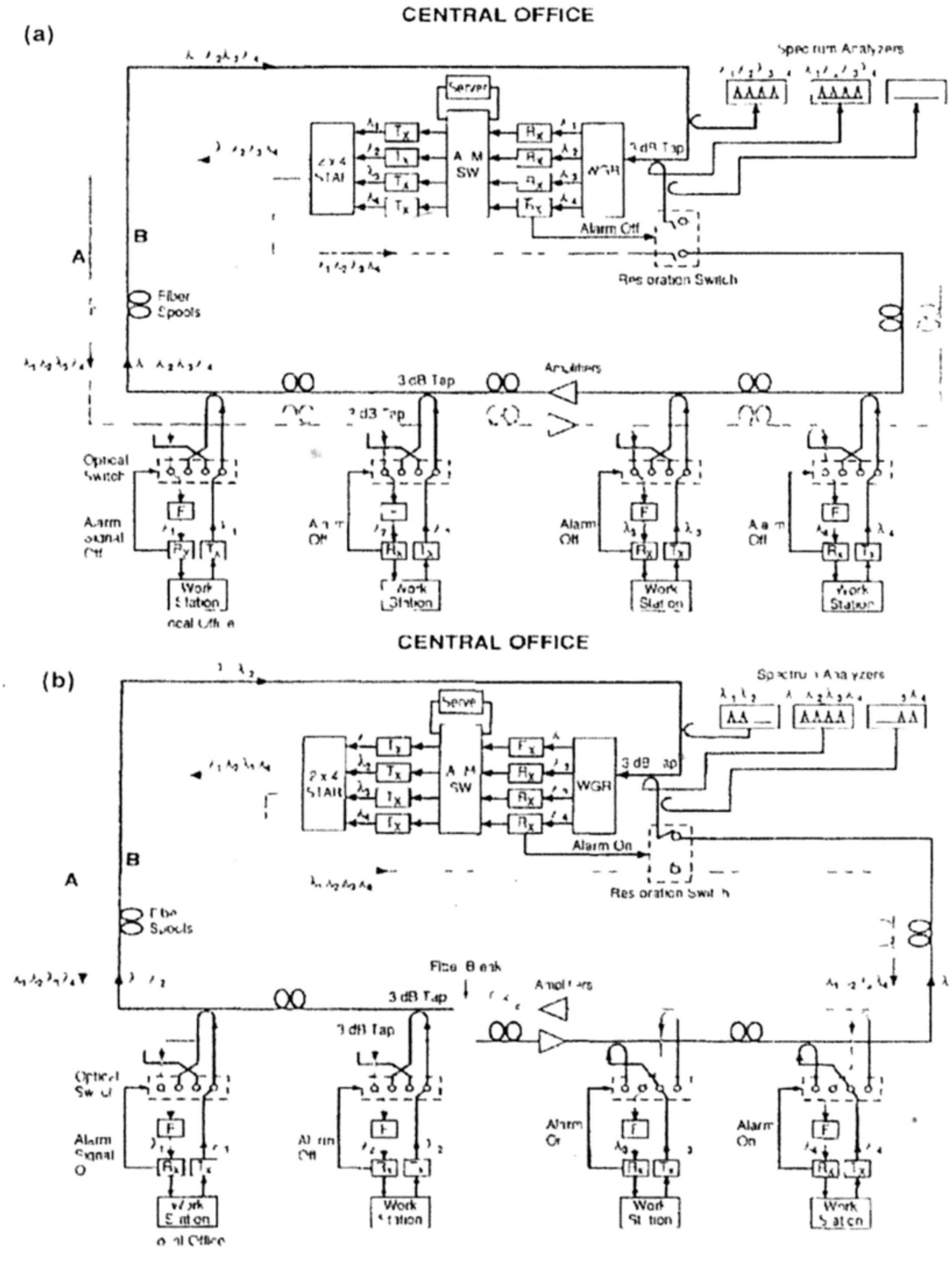

Fig 4 7 A restorable WDM ring network in [72] (a) Schematic of the network under normal condition (b) Schematic of the network with a fiber break

Fig. 4.7 demonstrates an optically restorable WDM double-ring network both under normal mode and protection mode [72]. Under normal working mode as shown in Fig. 4 7(a), the two rings provided independent transmission paths for downstream and upstream traffic respectively. Under the condition of ring breakage as in Fig. 4.7(b), the network was divided into two sub-ring networks by the location of the breakage. In the sub-ring before the breakage site, the traffic at the nodes would not be affected, but traffic in the sub-ring behind the site would be disturbed. This disturbed traffic could be quickly restored via changing transmission directions in the rings by using the simple add/drop circuitries in the affected nodes. Optical switches were needed both in the central office and the subscriber nodes, which increased the difficulty of management and the system cost.

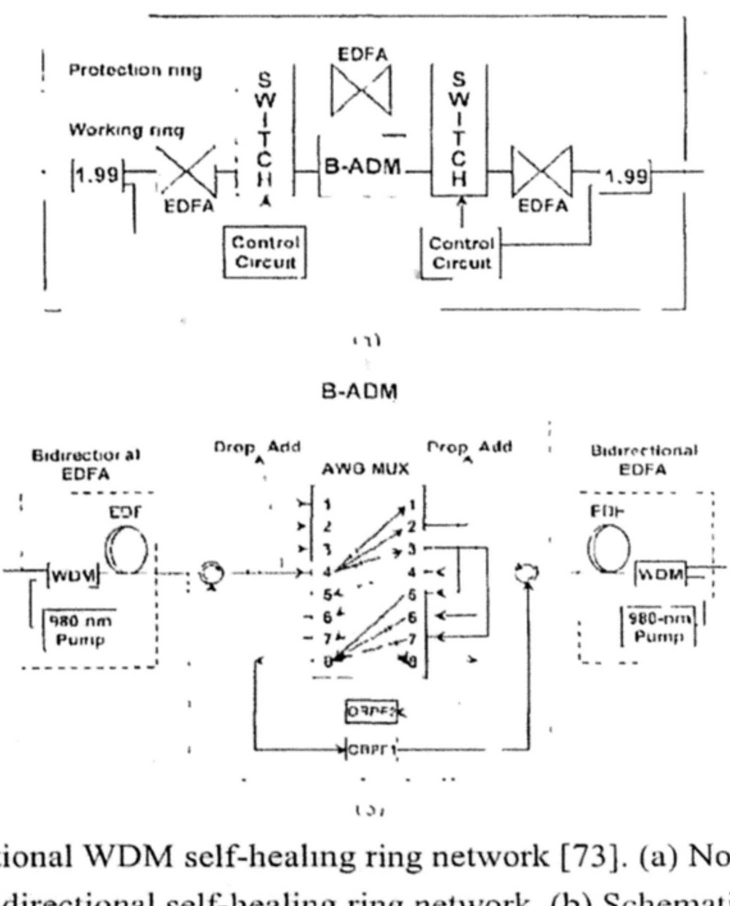

Fig. 4.8 A bidirectional WDM self-healing ring network [73]. (a) Node configuration of the proposed bidirectional self-healing ring network. (b) Schematic diagram of the bidirectional add/drop amplifier module.

Another bidirectional WDM self-healing network based on two-ring structure was proposed in [73] shown in Fig. 4.8. In this architecture, working ring transmitted bidirectional traffic between access nodes via a bidirectional add/drop amplifier modules under normal working mode. In case of fiber failure, the bidirectional traffic was routed to the protection ring. Bidirectional transmission on a single fiber was employed in the network, but the power penalty was less than 0.5 dB power penalty at an error rate of 10^{-9} by using different wavelengths for downstream and upstream data.

4.2.2.2 Single ring architectures

In order to further reduce the cost and the complexity of the survivable WDM networks, some architectures based on single ring instead of double rings were proposed in [74-77].

Fig. 4.9 shows a 1-fiber WDM self-healing ring with bidirectional optical add/drop multiplexers [74]. In this architecture, two sets of wavelengths regarded as working and protection channels transmitted in different directions, clockwise and counterclockwise. In the case of a ring breakage, the affected nodes utilized protection channels in the counter direction for transmissions by toggling the switches in the optical add/drop multiplexers. A similar architecture was proposed in [75] with a re-designed bidirectional add/drop multiplexer (BADM). The switches used in both CO and RNs could change the direction of the affected traffic in the ring in case of a ring breakage. However, the BADM might be complicated and protection switching at both CO and RNs might make it difficult for the network management.

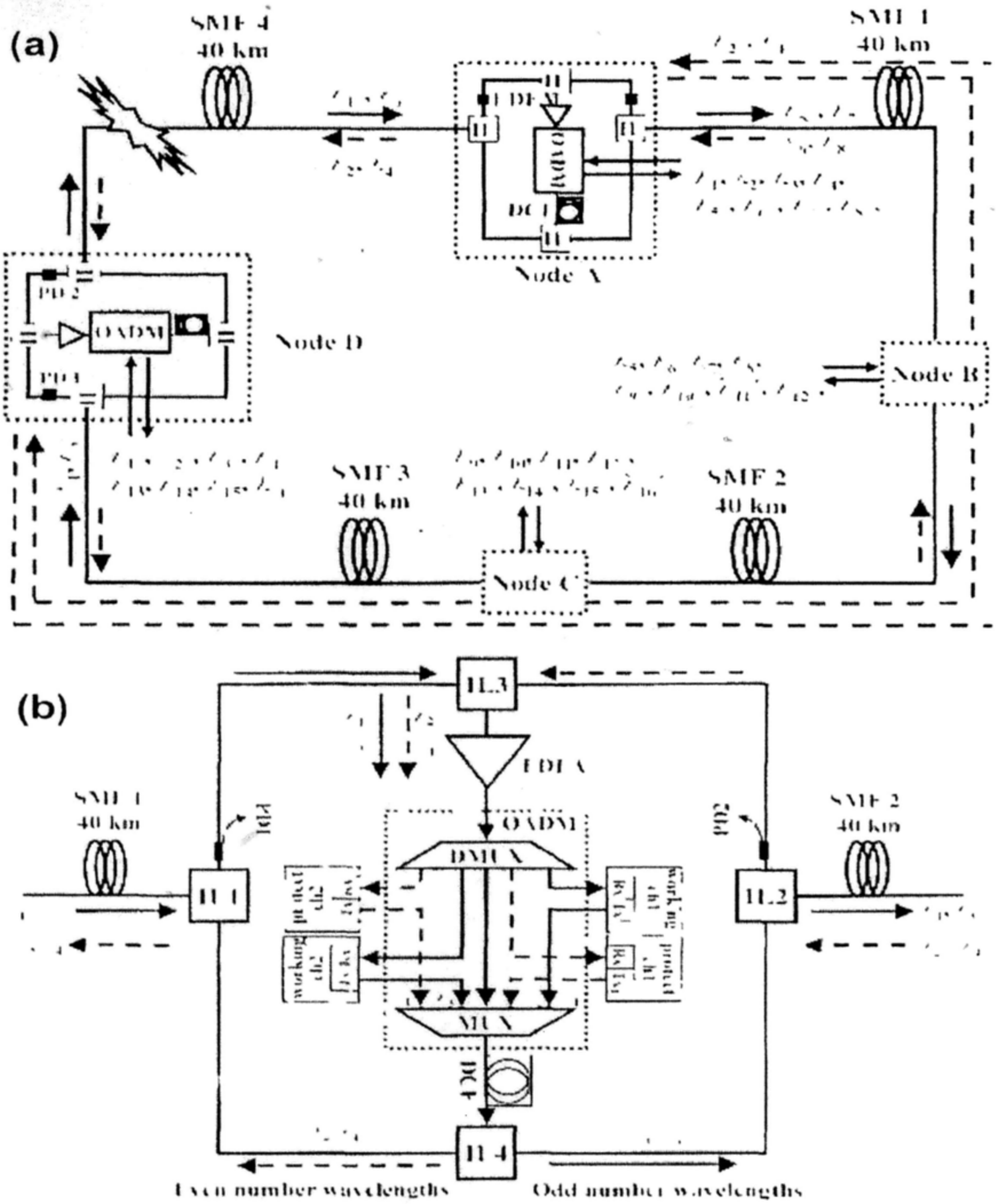

Fig. 4.9 A 1-fiber bidirectional WDM self-healing ring network [74]. (a) Network architecture. (b)Diagram of the optical add/drop multiplexer module (B-OADM).

Fig. 4.10 demonstrates another single-fiber survivable WDM ring network with simple access nodes [76]. Under the normal working mode, the optical switches in the ANs were all set in bar state as shown in Fig. 4.10(a). The downstream and upstream signals were counter propagating in counterclockwise (CCW) and clockwise (CW) directions respectively to the destined ANs. When a fiber failure occurred between AN2 and AN3, for example, as shown in Fig. 4.10(b), AN2 and all subsequent ANs in the CCW direction (e.g., AN1) detected the loss of in downstream data and changed their optical switches to cross state. Then, AN2 and all the affected ANs could still communicate with the hub via the CW direction of the ring without interrupting other in-service data streams, e.g., AN3 and AN4. In this way, the affected traffic due to the fiber failure was promptly restored and the survivability of the network was assured. Although the structure of the AN had been greatly simplified compared with that in [74], the protection switches were distributed in ANs. Another single-fiber bidirectional WDM self-healing ring network with bidirectional OADM for metro-access applications was proposed in [77], which performed protection switching only at the hub, so as to optimize the operation, administration and management cost. Under the normal working mode, the traffic of the whole network was balanced onto the two sides of the ring. The traffic of AN_i (for i=1,..., N/2) propagated along the left half of the ring, while the traffic of AN_i (for i=N/2+1,..., N) propagated along the right half of the ring, where N was the number of the ANs supported by the network. In case of a fiber failure, the traffic of the affected ANs would be rerouted to the new side of ring from its original side by changing the state of corresponding optical switch at the hub. However, ring topology always had a limitation in supporting a large number of ANs, due to the insertion loss induced by optical add/drop multiplexer modules.

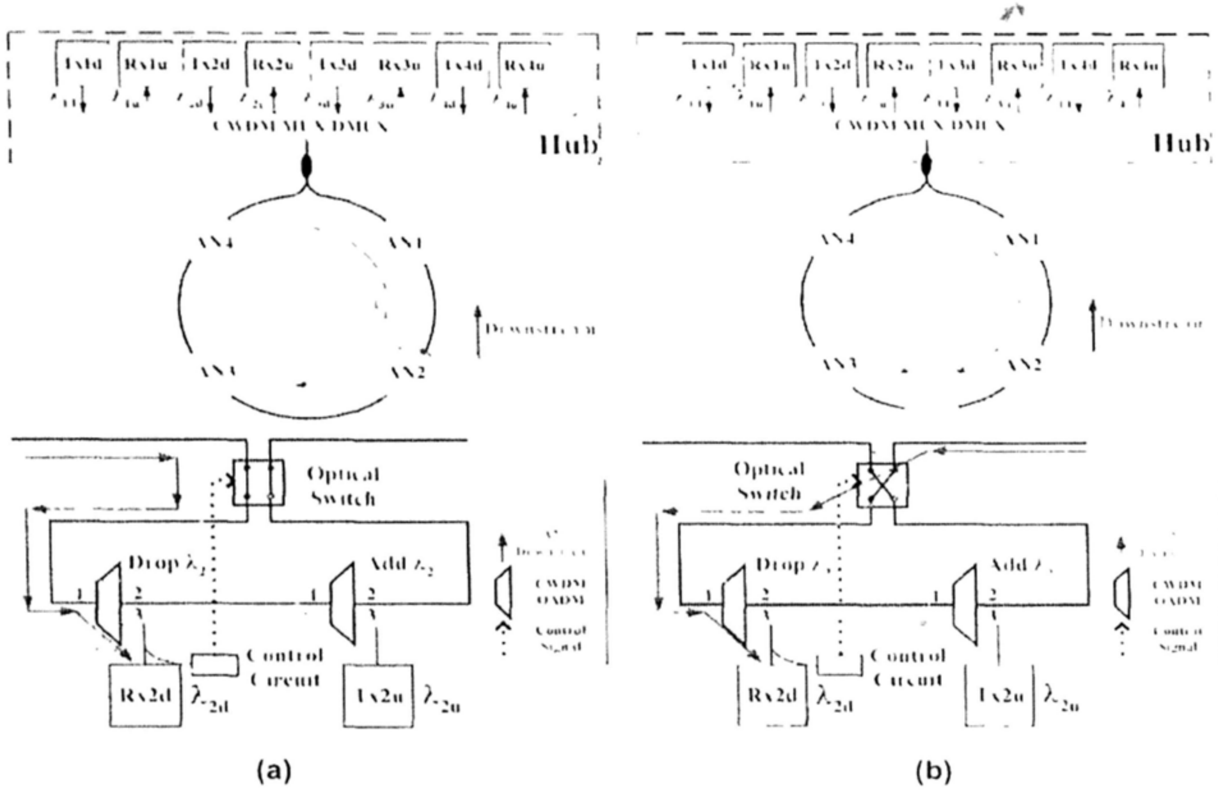

Fig. 4.10 A single-fiber survivable WDM ring network and the structure of the access node (AN) [76]. (a) Under normal mode. (b) Under protection mode.

4.2.2.3 Star-shaped ring architectures

Besides the double and single ring architectures, an interesting survivable optical star-shaped ring network was proposed in [78-79], as shown in Fig. 4.11. This architecture could be cost efficient in some areas in which optical cables were already deployed in star configuration. Based on optical foldback using cyclic property of the NxN AWG, a closed optical path was configured over the star-wired cable plant, which made the network logically in tree topology as shown in Fig. 4.11(b). By utilizing the optical foldback at the OLT and wavelength routing property of the AWG, another set of backup wavelength paths were provided against any fiber failure between any pair of the nodes. During any link failure in the network as shown in Fig. 4.11(b), the designated backup wavelength (say λ_6) was activated by changing the fiber connections at the input ports of the AWG via the optical switch, so as to bypass the failed link. However, this architecture failed to provide a fast data recovery, because the fiber connections at the AWG had to be changed in case of fiber failure as well as some tunable components. In addition, the size of the network could not be easily enlarged due to the complex fiber connections at the AWG.

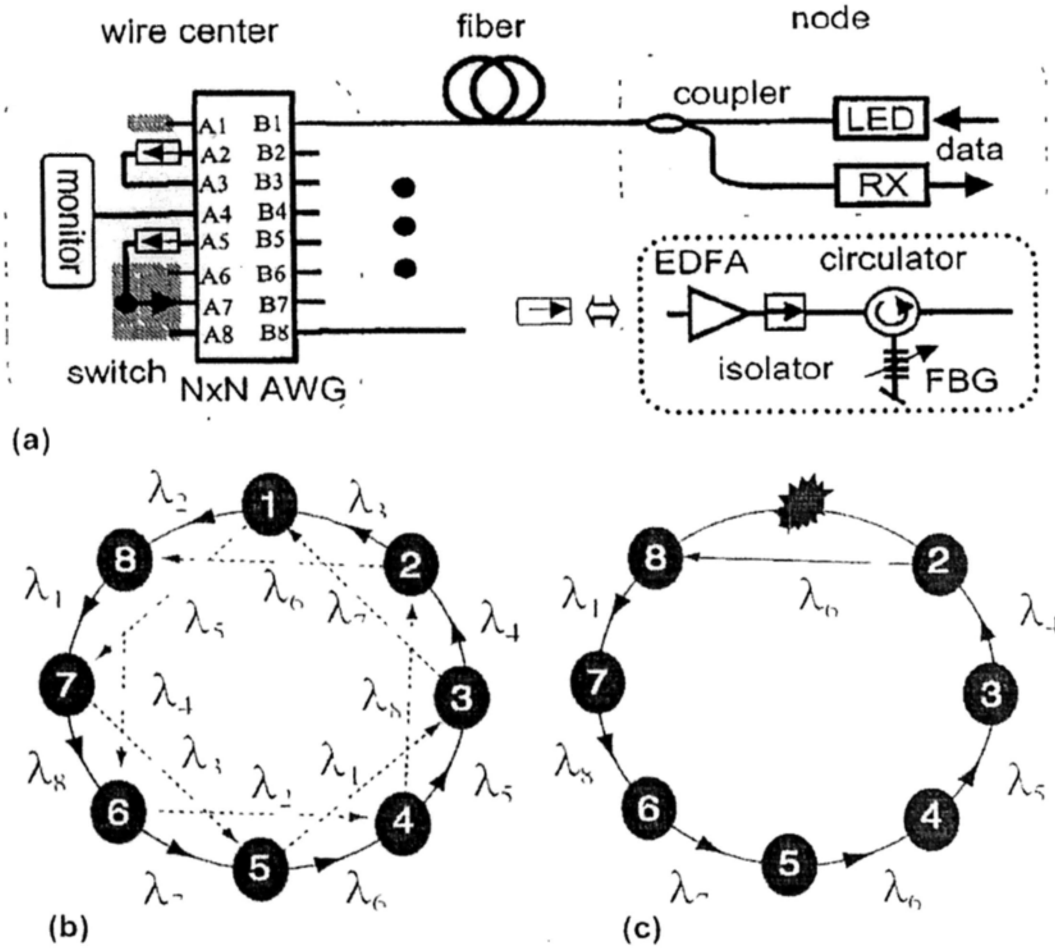

Fig. 4.11 (a) A survivable optical star-shaped ring network; (b) lightpath diagram, dotted lines are the designated protection paths; (c) the protection lightpath is adopted when node 1 failed [78].

4.3 A centrally controlled survivable WDM-PON based on OCS

4.3.1 Introduction

In this section, different from all the schemes discussed above, a simple centrally controlled survivable WDM-PON architecture, with colorless ONUs, employing an OCS [81] is proposed. The proposed protection switching mechanism is based on alternate path routing of optical subcarriers generated by applying OCS technique to the light source in each transmitter at OLT. No additional dedicated light source for protection switching is needed. Only electronic switches, instead of optical ones, are required at the OLT to trigger the control clock signal in the OCS process, thus fast traffic restoration is guaranteed. Both the distribution and the feeder fibers are protected against the possible fiber cut failure. Besides, by employing inverse-return-to-zero (IRZ) [88] format for the downstream transmission and nonreturn-to-zero (NRZ) format for the upstream remodulation, the ONUs remain colorless and simple. Experimental demonstration of 10-Gb/s transmissions both in normal working and protection modes have shown a short traffic restoration time.

4.3.2 Proposed system architecture

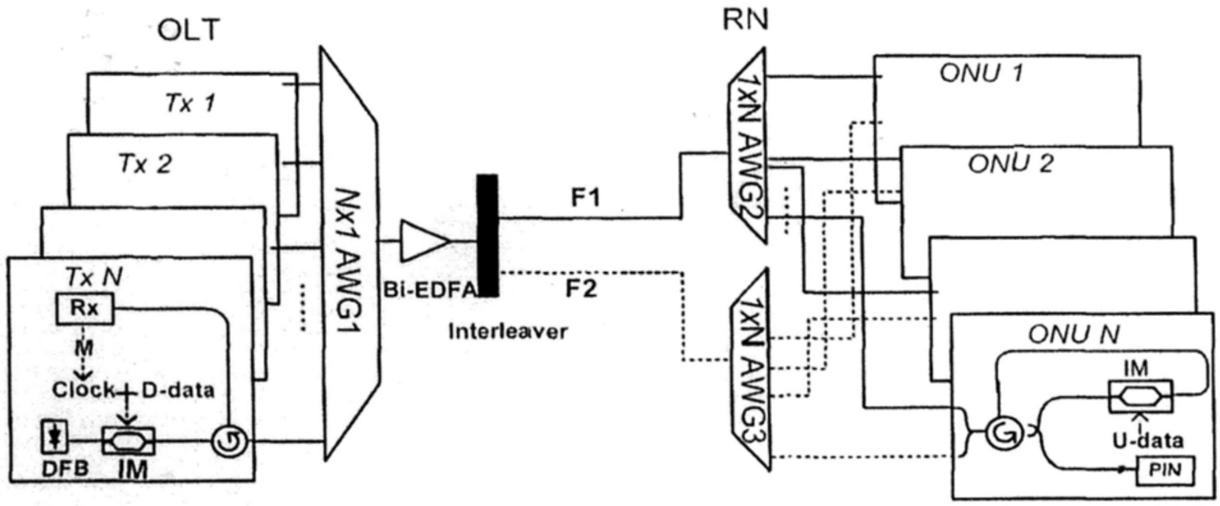

Fig. 4.12 The WDM-PON with proposed self-protection scheme. IL: optical interleaver, M: monitoring unit.

Fig. 4.12 depicts the proposed centrally-controlled survivable WDM-PON architecture with *N* ONUs. At the OLT, continuous wave (CW) light from each transmitter is first fed into a Mach–Zehnder intensity modulator (IM), biased at null transmission point, and driven by a composite signal of a control clock and the downstream data (D-data). The peak-to-peak voltage (V_{pp}) of the driving composite signal should be twice of the half-wave voltage (V_{π}) of the IM. In this way, the optical central carrier is suppressed, while the two generated sidebands (optical subcarriers) are carrying the downstream data in IRZ format. This is also known as OCS-IRZ format. Under normal working mode, the control clock signal is off. Thus, OCS is not enabled and the original input optical carrier works as the normal downstream carrier. However, when a fiber failure is reported either in feeder or distribution fiber, by means of monitoring the power outage of the respective received upstream signal at the OLT, the clock signal is turned on to generate OCS-IRZ downstream data in protection mode. The downstream wavelengths, either the central carrier under normal working mode or the generated optical subcarriers under protection mode, are then combined with all other modulated ones from other optical transceivers at the OLT, via an $N\times1$ AWG (AWG1). Under protection mode of one particular optical transmitter, one of the generated optical subcarriers falls outside the transmission passband of the AWG1 and is largely suppressed, while the other one remains and is forwarded to the output port of the AWG1. The downstream wavelengths are then amplified by a bidirectional Erbium-doped fiber amplifier (EDFA), which can be constructed by two conventional EDFAs and two optical circulators. The amplified composite signal is then fed into an optical interleaver (IL), where the central carriers under normal working mode and the generated optical subcarriers under protection mode are delivered to the remote node (RN) over the fiber feeders, F1 and F2, respectively, before they are further demultiplexed at the RN, via $1\times N$ AWG2 and $1\times N$ AWG3, respectively. These demultiplexed carriers are then combined at their respective destined ONUs, via two sets of distribution fibers. At each ONU, the received downstream wavelength is tapped off by a 3-dB optical coupler, where half of the received optical power is directly detected to retrieve the downstream data, while the other half is fed into an IM for upstream data (U-data) remodulation in NRZ amplitude shift-keying (ASK) format. The upstream signal is then delivered back to the respective receiver unit at the OLT, where part of the received upstream power is fed into the monitoring unit (M) for fault monitoring. Any reported fault alarm (prolonged power outage) triggers the control clock signal for OCS and activates the protection mode.

Fig. 4.13 shows the downstream optical spectra to illustrate the principle of the protection mechanism. Fig. 4.13(a) shows the wavelength assignment of all input CW carriers (λ_1, ..., λ_N), and the transmission passbands of the AWG1 at the OLT. It is assumed that fiber failures have been detected along the lightpaths of both λ_2 and λ_3, for instance. For the optical carriers under normal working mode (say λ_1, λ_4,..., λ_N), the monitoring units at the respective transceivers at the OLT turn off their clock signals in order to disable the OCS process, and thus only the original input central carriers exist for the downstream transmission. Due to the spectral separation property of IL, the normal working central carriers are delivered on the normal working path, which includes the feeder F1, AWG2 and the respective distribution fibers, via the even port of the IL, as illustrated in Fig. 4.13(c). On the contrary, for the optical carriers under protection mode (say λ_2, λ_3), the monitoring units at the respective transceivers at the OLT trigger the clock signal to generate the respective OCS-IRZ spectra, as shown in Fig. 4.13(b). With the filtering effect of the AWG1, only one of the two generated optical subcarriers in each case is selected and utilized as the protection carrier for downstream transmission. Due to the wavelength shift introduced by OCS, the protection carriers are switched to the protection path (including the protection feeder F2, AWG3 and the respective distribution fibers), via the odd port of the IL, as illustrated in Fig. 4.13(d). The working and the protection paths are finally combined at the respective destined ONUs. As a result, the possible failures in either feeders or distribution fibers along the individual lightpaths are protected, simultaneously.

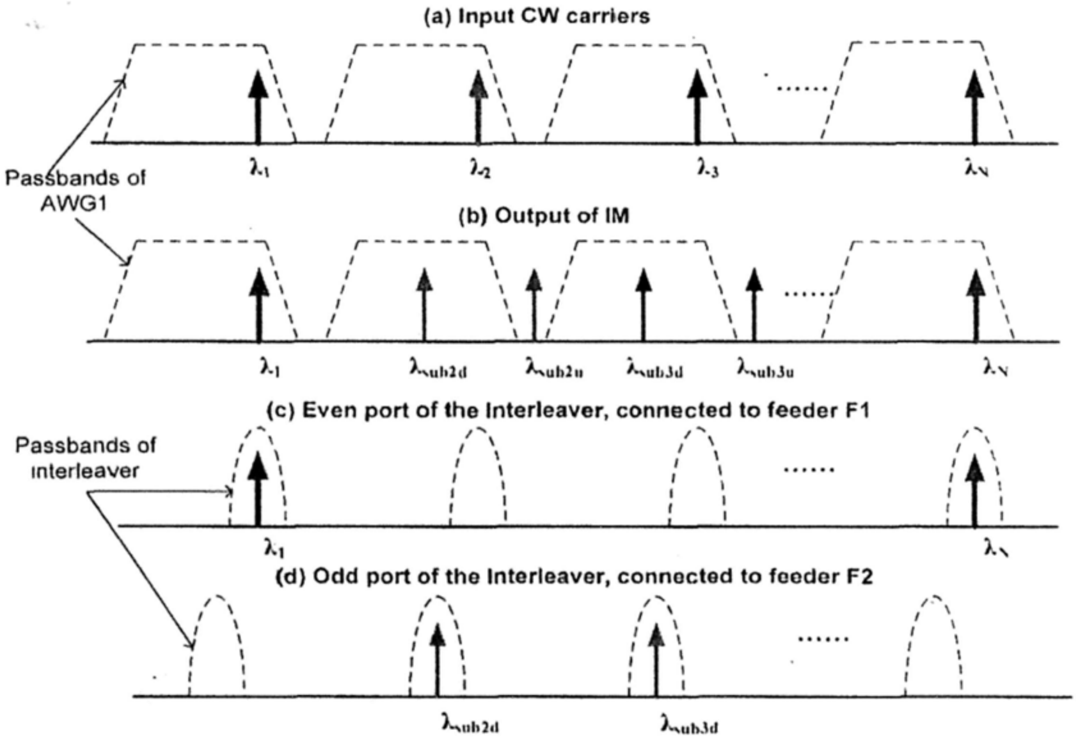

Fig. 4.13 Spectra of downstream carriers to illustrate the protection principle, assuming that fiber failures have been detected along the lightpaths of λ_2 and λ_3, for example.

4.3.3 Experimental demonstration

Fig. 4.14 shows the experimental setup of a four-wavelength WDM-PON, for proof-of-concept of the proposed scheme. The four downstream wavelengths were at Ch1:1546.06 nm (λ_1), Ch2:1546.86 nm (λ_2), Ch3:1547.66 (λ_3) nm and Ch4:1548.46 nm (λ_4). The proposed protection scheme was applied to Ch3 and its CW light was fed into a 40-Gb/s optical IM, driven by a 40-GHz clock signal, which was controlled by the monitoring unit. The frequency of the clock was related to the spectral property of the IL used in the experiment. It could be greatly reduced if an IL with narrower free spectral range was used. The CW light at Ch1, Ch2, and Ch4 were combined before being modulated by 10-Gb/s 2^{31}-1 NRZ pseudorandom binary sequence (PRBS), via a 10-Gb/s optical phase modulator, in order to simulate three other in-service modulated wavelength channels in differentially phase-shift keying (DPSK) format, without protection. Under the protection mode of Ch3, the control clock signal was enabled to create two optical subcarriers, λ_{sub1} at 1547.34 nm, and λ_{sub2} at 1547.98 nm; while under its normal working mode, the control clock signal was disabled and only the central carrier λ_3, at 1547.66 nm existed. Ch3 were then fed into another IM, driven by 10-Gb/s 2^{31}-1 PRBS precoded IRZ downstream data, before being combined with other three channels, Ch1, Ch2 and Ch4. The downstream signals were amplified to about 6 dBm, via an EDFA and were forwarded to a 50/100-GHz IL. Under normal working mode, all four wavelengths were fed into a piece of 20-km dispersion shifted fiber (DSF), denoted as DSF1, via the even port of the IL. Under protection mode, only Ch1, Ch2, and Ch4 were fed into DSF1, while the two optical subcarriers, λ_{sub1} and λ_{sub2}, at Ch3 were fed into another piece of 20-km DSF, denoted as DSF2, via the odd port of the IL. DSF was employed to emulate dispersion compensated transmission path. It could be replaced by standard single-mode fiber with dispersion compensating module. The wavelength channels were delivered to their destined ONUs, via AWG2 and AWG3. Under protection mode of Ch3, AWG3 also filtered out λ_{sub2} of the OCS-IRZ signal in Ch3, in order to alleviate the beating effect at the receiver. At the ONU receiving Ch3, half of the received power was used for downstream data detection and the other half was reused for upstream data transmission, via another IM driven by the 10-Gb/s 2^{31}-1 PRBS upstream NRZ data. The upstream ASK signal was then sent back to the OLT, where part of the received upstream data was fed into the monitoring unit to control the protection switching whenever a power outage was detected.

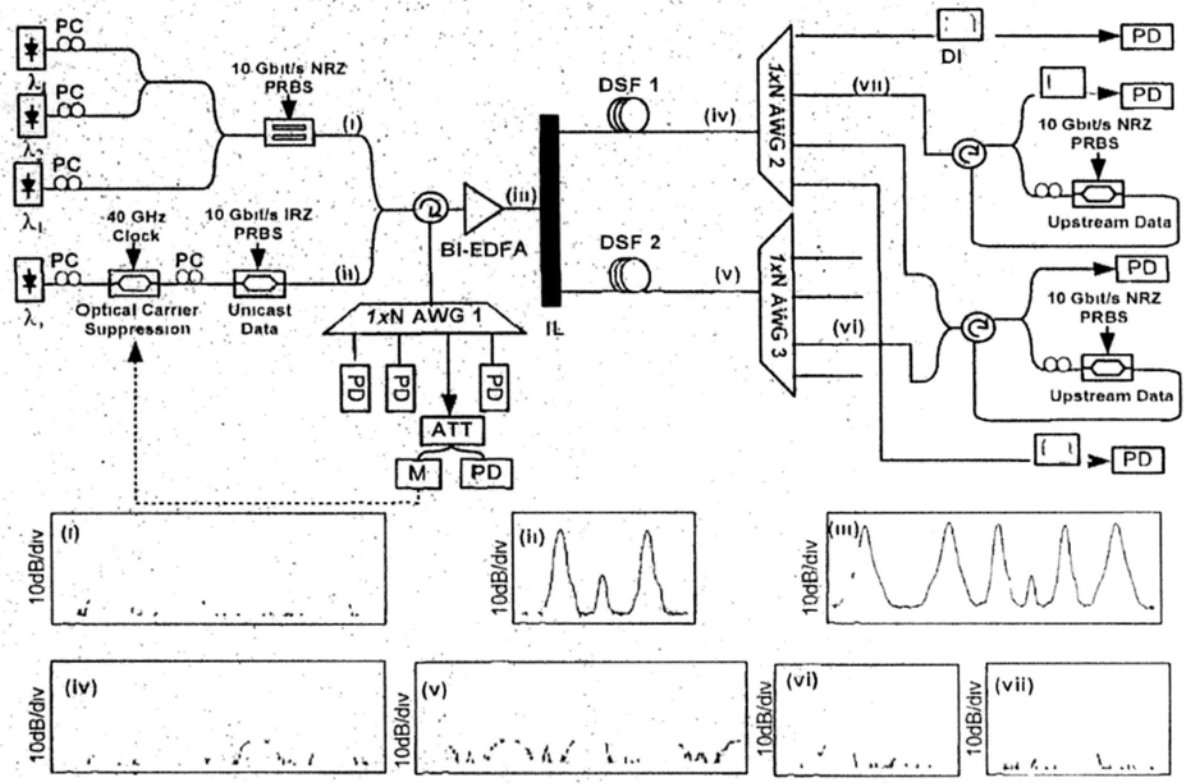

Fig. 4.14 Experimental setup. DSF: dispersion shifted fiber; Bi-EDFA: bi-directional erbium doped fiber amplifier. Insets show the spectra when channel 3 is in its protection mode. Horizontal scale: 0.4nm/div.

We have also measured the BER performances of Ch2 and Ch3, when Ch3 was under its normal working or protection mode. In Fig. 4.15, about 0.3-dB penalty was observed for Ch2, in all cases of transmissions, between the two operation modes of Ch3, which might mainly due to the non-ideal filter effect of the AWG. In Fig. 4.16, about 0.5-dB degradation was observed for Ch3, in all cases of transmissions, between the two operation modes of Ch3, which might be attributed to the limited optical carrier suppression ratio in the OCS process and the non-ideal filtering effect of the AWG, under protection mode. The traffic restoration time was also measured at the monitoring unit, as shown in inset of Fig. 4.16. About 5-ms switching time was experimentally observed. This switching time was mainly limited by the IM and the electronic switch employed in the experiment.

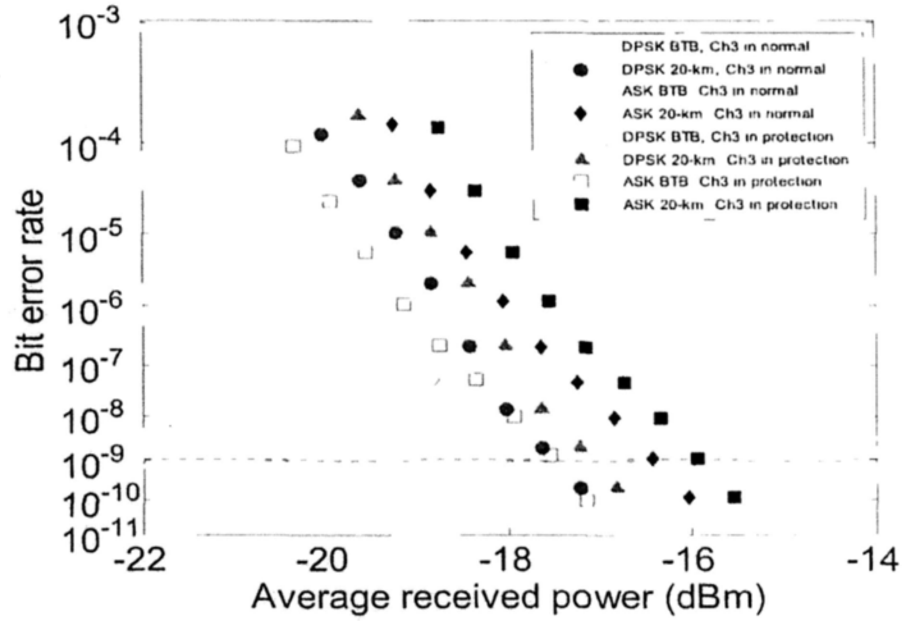

Fig. 4.15 BER measurements for channel 2

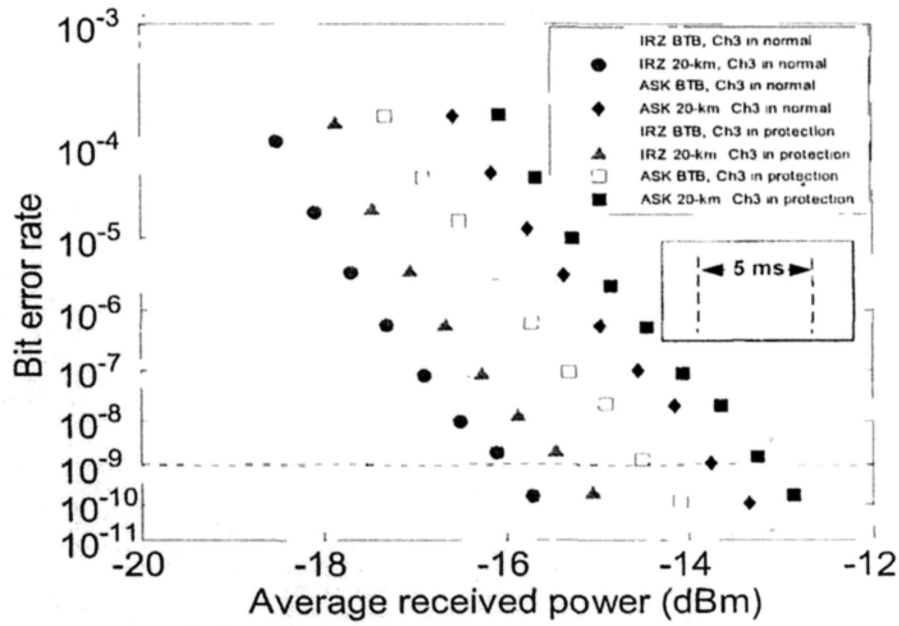

Fig. 4.16 BER measurements for channel 3

In our experiment, the power fed into transmission link was about 6 dBm, for the downstream data. The losses induced by fiber transmission, optical circulator, AWG, and optical interleaver were around 5 dB, 1 dB, 4 dB, and 2 dB respectively. Thus the received downstream power for Ch3 was around 12 dBm providing more than 4-dB margin. Our proposed simple, centrally-controlled, WDM-PON architecture with colorless ONUs can simultaneously protect against the distribution and feeder fiber failures with a fast data restoration.

4.4 A survivable architecture for WDM/TDM PONs

Passive optical network, is considered as the future-proof solution to broadband access network, because it enables a delivery of higher data rate to the subscribers via optics media, and eases the network maintenance due to its passive nature at the RN. TDM-PON, such as BPON [5] and EPON [6], have already been standardized and deployed by network operators for access network applications as a cost effective approach because the cost can be shared by a large number of subscribers. However, the architecture may limit the capacity per user and cause a transmission collision as well as security problem. WDM-PONs [28] can alleviate the limitations and problems exiting in TDM-PONs, by providing a subscriber with dedicated wavelength. Although the capacity it provides to per subscriber can be very high, the cost per subscriber is also high as it can not be shared by other subscribers, especially for access network, which is highly sensitive to cost. Therefore, a PON combining wavelength-division-multiplexing (WDM) and time-division-multiplexing (TDM) technologies to optimize network performance and resource utilization, known as WDM/TDM hybrid PON, has attracted more and more attention nowadays [30, 89].

4.4.1 Introduction

A WDM/TDM hybrid network, which combines TDM technology and WDM technology, can increase the network capacity by enlarging the number of subscribers a single wavelength can accommodate, while keeping the cost per subscriber much lower than that in a traditional WDM-PON, which is essential for access applications. Thus although the bandwidth per subscriber in a WDM/TDM PON is less than that in a WDM-PON, it is still considered as a smooth migration from TDM-PON to WDM-PON, when the cost for a pure WDM-PON is still high especially for subscribers. This hybrid network based on the PON architecture has limited protection feature, and any fiber failure may cause enormous loss in data transmission. Therefore, a survivable architecture for WDM/TDM PONs is also highly desirable to provide subscribers with high-available and reliable services. In this part, we will propose a novel WDM/TDM PON architecture which can provide self-protection using a ring topology to connect the subscribers.

4.4.2 Proposed system architecture

Fig. 4.17(a) depicts the proposed survivable WDM/TDM hybrid PON supporting $N\times M$ ONUs, where N is number of TDM RN, and M is the number of ONUs a single TDM ring can support by using the same pair of wavelengths at a TDM RN, say (λ_i, λ'_i) used for the downstream and upstream transmissions in the TDM ring at the TDM RN_i. At the OLT, continuous wave (CW) light source from each transmitter is first fed into a Mach–Zehnder intensity modulator (IM) driven by the downstream data for the designated TDM RN before combined with other modulated downstream wavelengths via a $N\times 1$ array waveguide gratings (AWG). The combined downstream wavelengths are delivered to the destined TDM RNs via two pieces of fiber feeders after amplified by a bidirectional Erbium-doped fiber amplifier (Bi-EDFA). The two pieces of fiber feeders are connected to the i^{st} and $(N+i)^{th}$ input ports of a $2\times 2N$ AWG, whose i^{th} and $(N+i)^{th}$ output ports are connected to the i^{th} TDM RN via a 2×2 optical coupler. Under the normal working mode, the downstream wavelengths will be delivered via the upper fiber feeder and destined to the TDM RNs after demultiplexed via the $2\times 2N$ AWG. If a fiber failure occurs at any point between OLT and the TDM RN, the power loss will trigger the 1x2 optical switch at the OLT and the downstream wavelengths are delivered to the destined TDM RN via the lower fiber feeder used as the protection path. At the TDM RN, the downstream wavelength is fed into the TDM ring composed of M ONUs, and the downstream signals are broadcast to all the ONUs. The ONU, as shown in Fig. 4.17(b), is simply composed of a 2×2 optical switch, optical coupler, optical circulator, monitoring unit, receiver and transmitter. When the downstream wavelength fed into an ONU via the input port, part of the downstream power will be dropt by the coupler for receiving and detection, while the left power passes through the ONU and are used for other's reception. The upstream transmission from ONU to OLT is added to the TDM ring via the optical circulator. In order to avoid the collision in the upstream transmission, only one ONU in the ring can transmit upstream data in a single allocated time slot, which can be realized be a typical DBA in TDM-PONs. Besides the protection provided against any fiber failure between the OLT and the TDM RN, the network can also provide protection against any fiber failure in the TDM ring at the TDM RN.

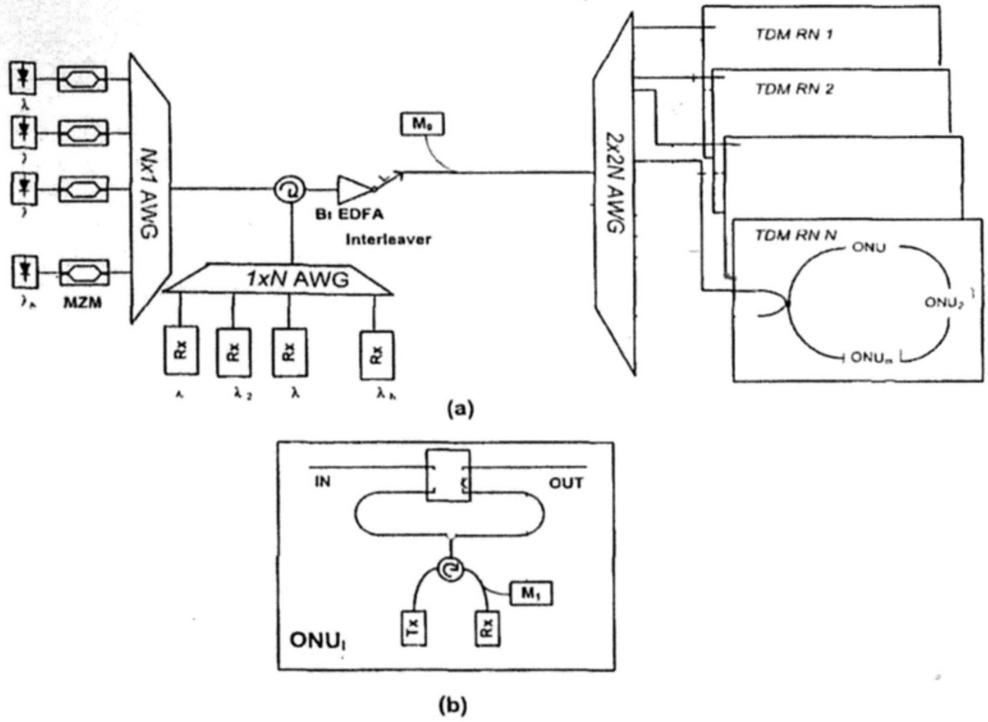

Fig 4 17 Proposed survivable architecture for WDM/TDM PONs (a) Configuration of the proposed network (b) Schematic diagram of the ONU module $M_{0/1}$ monitoring unit

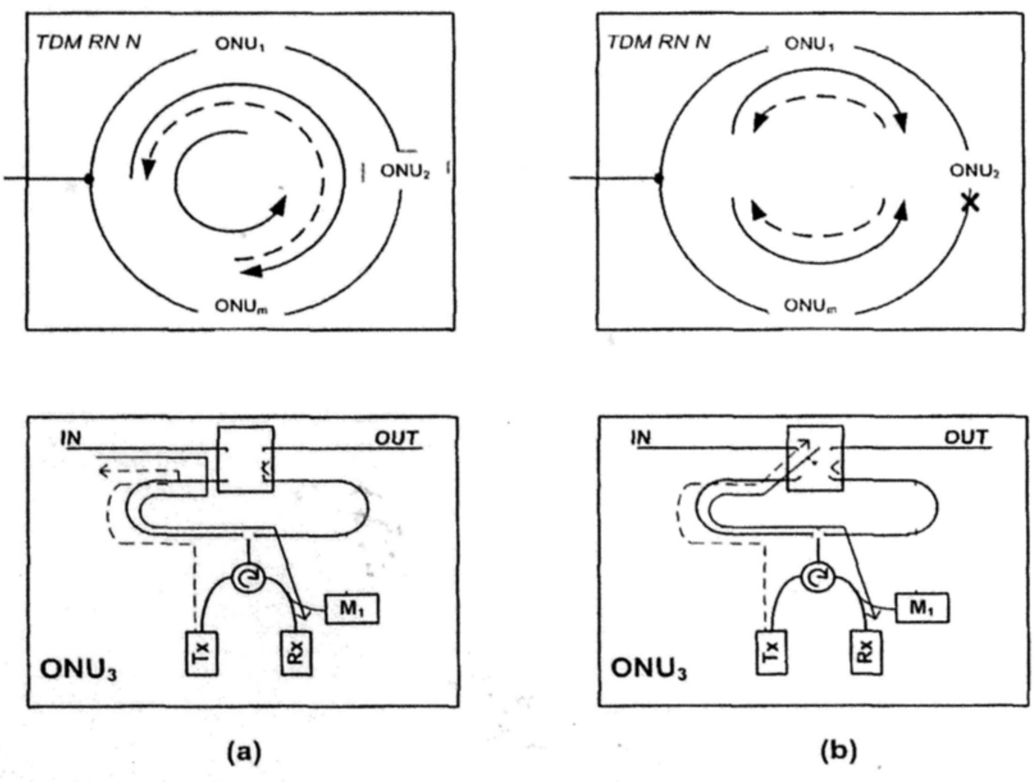

Fig 4 18 TDM RN architecture and the structure of ONU_3 (a) Structures under normal working mode (b) Structures under protection mode in case of a fiber cut between ONU_2 and ONU_3 Solid and dashed arrows show the routing paths of the downstream and upstream traffic of ONU_3, respectively

Under normal working mode, as shown in Fig. 4.18(a), the 2x2 optical switches in the ONUs are all set in bar state. Thus, each ONU can receive the downstream data and send out upstream data through the CCW and CW directions, respectively. When a fiber cut occurs between ONU_2 and ONU_3, as shown in Fig. 4.18(b), the optical switches in the ONU_i, (for i=3, ..., N) are changed from bar state into cross state while keep the switches in left ONUs unchanged. In this way, the ONUs before the breakage point unaffected, while the traffic in the other ONUs changes its transmission direction: downstream transmission propagates along CCW direction and upstream transmission along CW direction. Thus the affected traffic due to the fiber cut is quickly recovered and the survivability of the whole network is assured.

4.4.3 Experimental demonstration

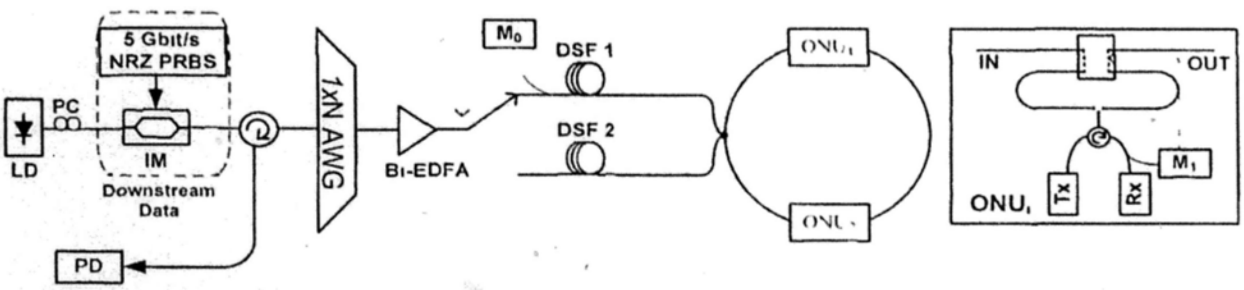

Fig. 4.19 Experimental setup for the proposed WDM/TDM hybrid PON with two ONUs.

Fig. 4.19 shows the setup of our proof-of-concept experiment for the proposed WDM/TDM hybrid PON. A CW light at 1546.9 nm was intensity-modulated by a 5-Gb/s 2^{31}-1 pseudorandom binary sequence (PRBS) downstream data before fed into an 1x16 AWG, which was used to emulate a WDM channel for the TDM ring at the TDM RN. The downstream data were then amplified to about 6 dBm before fed into the 20-km dispersion shift fiber (DSF). DSF was employed to emulate dispersion compensated transmission path. It could be replaced by standard single-mode fiber with dispersion compensating module. The downstream data were delivered to the TDM ring either via DSF1 during the normal working mode, or via DSF2 in case of a fiber cut in DSF1. The optical switching was realized by the optical switch controlled by the monitoring unit M_0. At the TDM RN, the downstream data were fed into the TDM ring comprised of two ONUs via a 2x2 optical coupler. In the normal working mode, the downstream data were broadcast to all ONUs in CW direction, while the upstream 5-Gb/s 2^{31}-1 PRBS data, which were intensity modulated onto the upstream CW at 1559.7 nm via an IM at the transmitter module in each ONU, would propagate in the CCW direction. When a fiber cut occurs between ONU_1 and ONU_2, the loss of downstream power in ONU_2 would toggle the state of the 2x2 optical switch, while ONU_1 was unaffected by the fiber cut. In this way, ONU_2 was quickly restored except for transmission direction changed.

We measured the BER performance of ONU_2. Fig. 4-20 shows the measured BER performances during the working mode. The back-to-back receiver sensitivities at 10^{-9} were about -22.4 and -22.5 dBm for downstream and upstream transmissions, respectively. After 20-km transmission, about 0.4 dB penalty was observed for both the downstream and the upstream data. Fig. 4-21 shows the BER performances of ONU_2 in case of a fiber cut between ONU_1 and ONU_2, which shows similar performances both in the downstream and upstream transmissions compared with those in Fig. 4-20. The switching time was also investigated at the monitoring unit M_1, as shown in the inset of Fig. 4-21. About 11-ms switching time was experimentally observed, implying our scheme guaranteeing a fast restoration and survivability. Fig. 4-22 shows the BER performances of ONU_2 when a fiber cut occurs in DSF1. Similar performances in the downstream and upstream transmissions were observed in the experiment. A switching time of about 16-ms was also detected at the monitoring unit

M_0, as shown in the inset of Fig. 4-22. The different switching time between M_0 and M_1, is mainly attributed to the different optical switches we used in the experiment.

In our experiment, the power fed into transmission link was about 6 dBm, for downstream data. The losses caused by transmission, optical circulator, optical coupler and optical switch were around 5 dB, 0.5dB, 3dB and 0.5dB respectively. Thus the power for downstream data detection at ONU_2 was around -9 dBm providing more than 13 dB system margin. By using amplifier before multiplexer, the system can provide enough power margin for the upstream transmission.

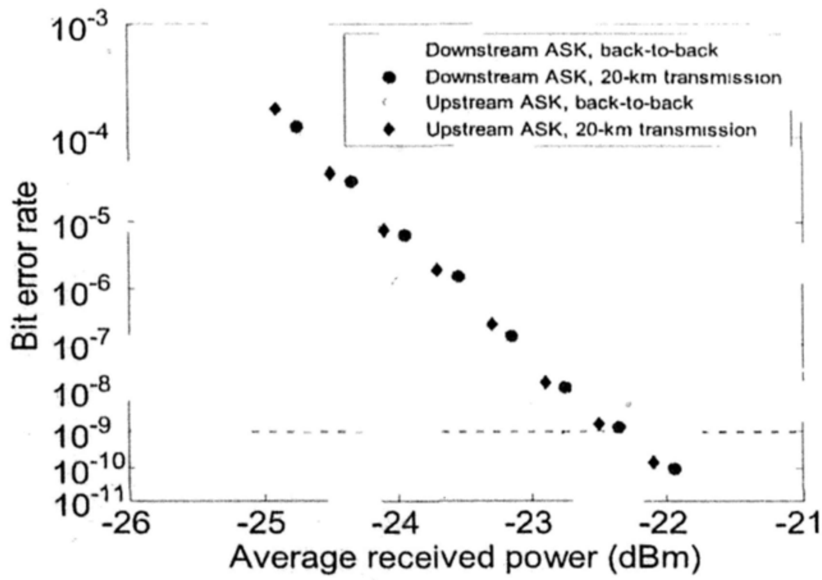

Fig. 4.20 BER measurements for ONU_2 in the normal working mode

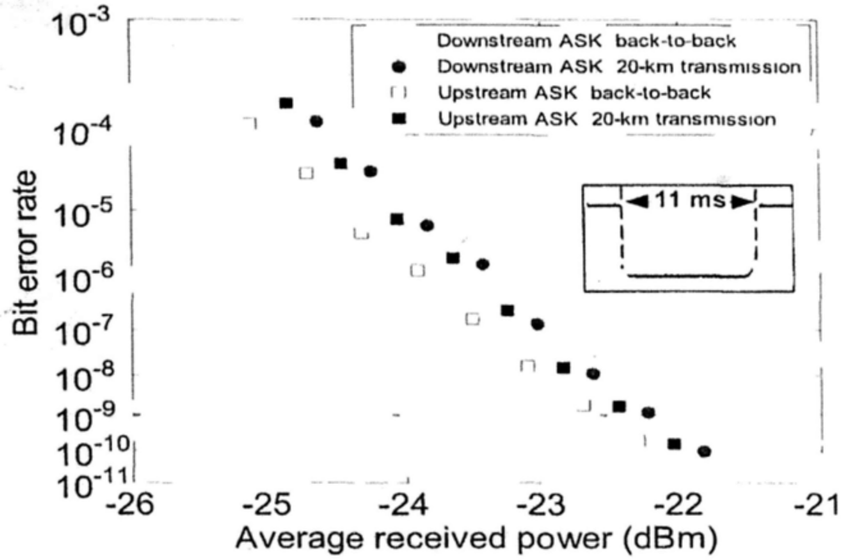

Fig. 4.21 BER measurements for ONU_2 in case of a fiber cut between ONU_1 and ONU_2.

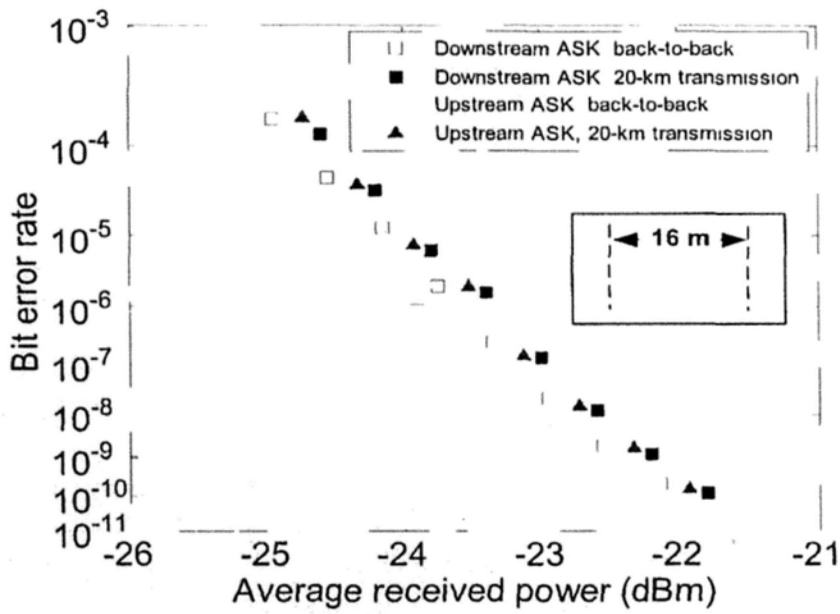

Fig 4 22 BER measurements for ONU_2 when a fiber cut occurs in DSF1

4.4.4 Discussion

In the experiment, we used 50:50 1x2 optical coupler in each ONU for proof-of-concept. However, the coupling ratio of the optical coupler used in each ONU can be optimized, so that a single TDM ring at the TDM RN can accommodate a maximum number of ONUs with a satisfied power budget of the proposed network. In this way, the network capability of the proposed *N*x*M* WDM/TDM PON can be maximized with the variable M optimized, when the variable N is pre-determined. We assume that the downstream power of a single wavelength is amplified to 6 dBm before fed into the feeder fiber, and the typical losses for the 20 km transmission, AWG, 2x2 optical coupler, optical circulator, and optical switch are 5dB, 4dB, 3dB, 0.5dB, 0.5dB respectively. Therefore the power fed into the TDM ring is about -3 dBm. If the coupling ratio of the coupler used in each ONU for dropping downstream signal is $x:(1-x)$, the total insertion loss for the bypass, dropped and added signals at each ONU are $[-10\log_{10}(1-x)+1]dB$, $[-10\log_{10}(x)+1]dB$ and $[-10\log_{10}(x)+1]dB$, respectively. We also assume that a piece of L km fiber between two adjacent ONUs may cause $(0.2\times L)dB$ loss and the PIN receiver sensitivity is -22.2 dBm at 10^{-9} when the data rate is 5 Gb/s. Considering the worst case (under normal working mode) with M ONUs, the downstream signals for ONU_M pass through (M-1) ONUs, which experience $(M-1)\cdot[-10\log_{10}(1-x)+1]dB$ bypass loss and $[0.2\times(M-1)\cdot L]dB$ transmission loss. Due to the bi-directional EDFA used at the OLT, the upstream signals can always provide enough power budget for data reception. Thus we have the following power budget equation for dropped signal:

$$0.2\times(M-1)\cdot L+(M-1)\cdot[-10\log_{10}(1-x)+1]+[-10\log_{10}(x)+1]+3+3=22.2 \quad (1)$$

According to the condition in our experiment (L=0 km), the number of the ONUs supported in the network is plotted as a function of the coupling ratio of the optical coupler embedded in the ONU, as shown in Fig. 4.23. The maximum M=5 when x in the range of 0.1 to 0.3, which means the coupling ratio of the coupler for dropping downstream signals should be chosen from 10:90 to 30:70 when supporting five ONUs in a single TDM RN without any in-line optical amplifier. We also investigated the number of ONUs when increase the fiber length between two adjacent ONUs, L in the (1), and found that the TDM ring could still support four ONUs with L=4 km. The number of supported ONUs can be increased when improve the receiver sensitivity of the receiver at the ONU by using APD instead of PIN. Moreover, by employing bi-directional in-line optical amplifiers between adjacent ONUs the power budget constraint can be greatly relaxed and more ONUs can be accommodated in a single TDM ring at a TDM RN.

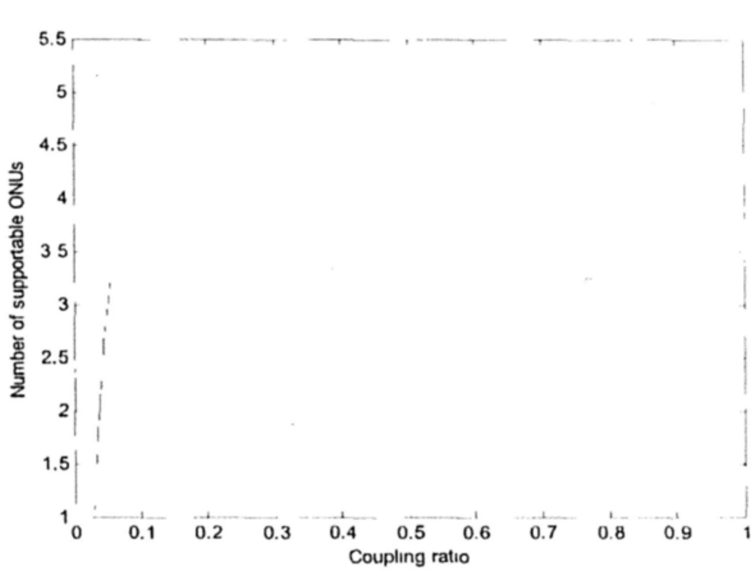

Fig. 4.23 Number of supportable ONUs as a function of coupling ratio of the optical coupler in ONUs

4.5 Summary

In this chapter, we have first reviewed several typical survivable architectures for WDM-PON systems, which can be divided into two categories in terms of topology employed in the WDM-PON, including the survivable architecture with tree topology [64-71], and the ones with ring topology [72-79]. The group protection mechanism was employed in survivable architectures for WDM PON, in which two adjacent ONUs were grouped to provide mutual protection against any failure happened in the distribution fibers [64]. However, the configuration of ONUs was quite complicated with two optical switches, blue/red filter and WDM coupler. The architectures were simplified in [65-66], which also employed group protection mechanism at ONUs, either by reducing the number of optical couplers needed at the RN [65] or the number of optical switches used in ONUs. The optical switches used in ONUs made difficulty in management and maintenance of the network. Thus survivable architectures having all protection switching performed at the OLT either with group protection in ONUs [67] or the OLT [68] were proposed. This so-called centrally controlled structure could greatly convenient the management and maintenance and simply the ONUs. In order to simplify the configuration of ONUs, some other survivable architectures utilizing the cyclical property of AWGs were proposed in [69-71]. The architectures failed to realize central control [69-70] or realize it at the cost of complicated OLT when many optical interleavers were used in the system [71]. Instead of tree-topology survivable WDM-PON, some ring-topology survivable architectures were also reviewed. In [72-73], the architectures with double-ring topology were proposed. Although the networks show good characteristics of data restoration with fast recovering time, the add/drop modules in the networks might be complex and the central control could hardly be realized. The architecture could be simplified to single ring, but the optical add/drop module remained complicated in [74]. The architecture with single ring in [75] succeeded in simplifying the add/drop modules, but failed to realized the central control for fault management. In order to realize the central control in ring-topology architectures, star-ring topology was employed in [77-79], which was physically configured in star topology but logically in ring topology. However, this architecture failed to provide a fast data recovery, because the fiber connections at the AWG had to be changed in case of fiber failure as well as some tunable components. In addition, the size of the network could not be easily enlarged due to the complex fiber connections at the AWG.

We then proposed a simple centrally controlled survivable WDM-PON architecture, with colorless ONUs, employing OCS technique. The protection switching mechanism was based on alternate path routing of optical subcarriers generated by applying OCS technique to the light source in each transmitter at the OLT. No additional dedicated light source for protection switching was needed. Only electronic switches, instead of optical ones, were required at the OLT to trigger the control clock signal in the OCS process, thus fast traffic restoration was guaranteed. Both the distribution and the feeder fibers were protected against the possible fiber cut failure. Besides, by employing IRZ format for the downstream transmission and NRZ format for the upstream remodulation, the ONUs remained colorless and simple.

On the other hand, since a WDM/TDM hybrid network, which combines TDM technology and WDM technology, can increase the network capacity by enlarging the number of subscribers a single wavelength can accommodate, while keeping the cost per subscriber much lower than that in a traditional WDM-PON, we have also proposed a novel WDM/TDM PON architecture which can provide self-protection using a ring topology to connect the subscribers, so that high-available and reliable services can be provide to subscribers.

We compared all the survivable architectures mentioned in this chapter in terms of network topology, type of switches, location of switches, number of switches, restoration time, etc, as shown in Table 4.1.

	Network topology	Type of switches	Location of switches	Switch Numbers	Restoration time
The architecture in [64]	Tree	Optical	ONUs	2N	1.8 ms
The architecture in [65]	Tree	Optical	ONUs	2N	9 ms
The architecture in [66]	Tree	Optical	ONUs	N	3 ms
The architecture in [67]	Tree	Optical	OLT	1	9 ms
The architecture in [68]	Tree	Optical	OLT	N	3 ms
The architecture in [69]	Tree	Optical	ONUs	N	9 ms
The architecture in [70]	Tree	Optical	ONUs	N	4 ms
The architecture in [71]	Tree	Optical	OLT	N	Not shown
The architecture in [72]	Double ring	Optical	Central and local office	2+4N	Not shown
The architecture in [73]	Double ring	Optical	Local office	2N	1.5 ms
The architecture in [74]	Single ring	None	None	None	Not shown
The architecture in [75]	Single ring	Electrical	Central office and RN	4N	8 ms
The architecture in [76]	Single ring	Optical	Access node	N	5 ms
The architecture in [77]	Single ring	Optical	Central office	N	9 ms
The architecture in [78]	Star	Optical	OLT	1	Not shown
The architecture in [79]	Star	Optical	OLT	1	Not shown
Proposed architecture for WDM PON	Tree	Electrical	OLT	N	5 ms
Proposed architecture for hybrid PON	Tree & ring	Optical	OLT and ONUs	N+1	11 ms/ 16 ms

Table 4.1 Comparison of different survivable architectures

	Data rate	Protection objective	Colorless ONU	Additional sources
The architecture in [64]	2.5 Gb/s	Distribution fiber	No	No
The architecture in [65]	2.5 Gb/s	Distribution fiber	No	No
The architecture in [66]	1.25 Gb/s	Distribution fiber	No	No
The architecture in [67]	2.5 Gb/s	Distribution fiber	No	No
The architecture in [68]	2.5 Gb/s	Distribution & feeder fibers	No	No
The architecture in [69]	2.5 Gb/s	Distribution & feeder fibers	No	No
The architecture in [70]	1.25 Gb/s	Distribution fiber	No	No
The architecture in [71]	10 Gb/s	Distribution & feeder fiber	Yes	No
The architecture in [72]	155 Mb/s	Ring	No	No
The architecture in [73]	2.5 Gb/s	Ring	No	No
The architecture in [74]	10 Gb/s	Ring	No	Yes
The architecture in [75]	2.5 Gb/s	Ring	No	No
The architecture in [76]	1.25 Gb/s	Ring	No	No
The architecture in [77]	2.5 Gb/s	Ring	No	No
The architecture in [78]	155 Mb/s	Distribution fiber	No	No
The architecture in [79]	2.5 Gb/s	Distribution fiber	No	No
Proposed architecture for WDM PON	10 Gb/s	Distribution & feeder fibers	Yes	No
Proposed architecture for hybrid PON	5 Gb/s	Distribution fiber, feeder fiber & ring	No	No

Table 4.1 Comparison of different survivable architectures (continued)

Notably, only the survivable architecture proposed in [74], employed additional light sources for protection channels, which backed up the data all the time and protection switches were needed, implying most fast data recovering, but the whole system were duplicated and the cost were extremely high. Among all the architectures, only the architectures in [71] and proposed by us for WDM-PONs had colorless ONUs in the system with highest data rate, 10 Gb/s, which could simplify ONU and released the management of ONUs, as no temperature control were needed for light sources in the ONU. Besides, our proposed architecture for WDM-PONs as well as that in [75], employed electrical switches instead of optical switches, implying a fast restoration time with cost effective switches. The location of the switches determines if a centrally control can be realized in the system, which helps to convenience management and maintenance. Thus the architectures in [67-68, 71, 77-79] and our scheme for WDM-PONs could realize the centralized control for fault management. The number of switches used in the scheme is another important issue to partly determine the complexity and cost of the system, N denoted the number of ONUs or access nodes. The schemes in [67, 78-79] employed only one optical switch, implying a lower system complexity and cost. Protection objective demonstrates to what extent the network can be protected. In the tree-topology architectures, a protection against a fiber cut in both feeder and distribution fibers was preferred, while in the ring based schemes, a protection against any fiber cut in the ring was desirable. Our proposed WDM-PON could provide protection for distribution and feeder fibers simultaneously, while our proposed hybrid PON could even provide protection for the TDM ring besides distribution and feeder fibers. Our proposed centralized-control survivable WDM-PON, which protected feeder and distribution fibers simultaneously with colorless ONUs, has great advantages over others in system cost and complexity as shown in table 4.1. Although our proposed WDM/TDM PON failed to realize central control, it greatly enriched the network capacity by enlarging the number of subscribers on a single wavelength by combining TDM and WDM technologies.

Chapter 5
Summary and Future Work

5.1 Summary of the thesis

In this thesis, we have investigated two main innovative technologies employed in a WDM-PON to enrich its networking capability: multicast overlay realization and survivable architecture design. In the first part of the thesis, we investigated previous multicast enabled WDM-PON architectures and proposed our own schemes and their variants to overlay multicast traffic onto the existing WDM-PONs. Our schemes have improved the system performance without additional light sources and successfully have realized centralized control for multicast transmission at the OLT with colorless ONUs. In addition, our scheme successfully supported two independent multicast data streams on a WDM PON. In the second part of the thesis, we investigated the typical survivable architectures for a WDM-PON, and then proposed a simple centrally controlled survivable WDM-PON architecture, with colorless ONUs, employing an optical carrier suppression technique. In our architecture, no additional dedicated light source for protection switching was needed. Moreover, only electronic switches, instead of optical ones, were required at the OLT to trigger the control clock signal in the OCS process, thus fast traffic restoration was guaranteed. In this part, we further employed survivable architecture design into a WDM/TDM hybrid PON, which was considered as a smooth and economical migration from TDM-PONs to WDM-PONs by offering large network capacity with a low cost per subscriber. By using TDM rings in the network, our scheme could provide the protection from the OLT to the end users.

In chapter 1, optical high speed access networks have been reviewed and the passive optical network technique for optical access networks was discussed. In particular, WDM-PONs, employing wavelength division multiplexing technique in a PON, were briefly investigated and analyzed

In chapter 2, we reviewed the typical architectures as well as novel techniques for WDM-PONs, especially networking capability enabling technologies including optical multicast technology and survivable architecture design.

In chapter 3, we have first reviewed several typical multicast enabled architectures, then proposed our own schemes to overlay multicast onto a WDM-PON: 1) a WDM-PON network with polarization-assisted multicast overlay control and its variant; 2) an optical multicast overlay scheme using optical sub-carriers; 3) optical overlay of two independent multicast streams on a WDM-PON. In the polarization-assisted multicast enabled architecture and its variant, by the cross-use of wavelengths, a separate path was provided for the multicast data from downstream point-to-point data without additional light sources, which guaranteed the transmission performances in for both multicast and point-to-point signal, but the system might suffer a lot from the Rayleigh Backscattering effect because same wavelengths were delivered on the same link although in different directions. In the multicast overlay scheme using optical sub-carriers, by employing optical carrier suppression technique at each downstream optical transmitter at the OLT, two coherent optical sub-carriers were generated to carry the 10-Gb/s downstream unicast DPSK signal and the 10-Gb/s downstream multicast ASK signal, separately without any additional light sources. As the downstream unicast signal and the upstream signal were carried on different fiber feeders, while the upstream signal and the multicast signal were carried on different optical sub-carriers, though on the same fiber feeder, the possible Rayleigh backscattering effect was much alleviated. However, the system could not support two independent multicast data streams simultaneously. In last scheme, by controlling a sinusoidal clock signal and an optical switch at the OLT, the delivery of the two multicast data, being carried by the generated optical tones, could be independently and flexibly controlled.

In chapter 4, several typical survivable architectures either employing tree or ring topology for WDM-PON systems were reviewed. We then proposed a simple centrally controlled survivable WDM-PON architecture, with colorless ONUs, employing an optical carrier suppression technique. The protection switching mechanism was based on alternate path routing of optical subcarriers generated by applying OCS technique to the light source in each transmitter at the OLT. No additional dedicated light source for protection switching was needed. Only electronic switches, instead of optical ones, were required at the OLT to trigger the control clock signal in the OCS process, thus fast traffic restoration was guaranteed. Both the distribution and the feeder fibers were protected against the possible fiber cut failure. Besides, by employing IRZ format for the downstream transmission and NRZ format for the upstream remodulation, the ONUs remained colorless and simple. On the other hand, we further proposed and experimentally investigated a simple, survivable WDM/TDM PON architecture. By duplicating the feeder and distribution fibers and using a TDM ring, the protection function could be provided to any fiber cut in the network from the OLT to the end OUNs. Error-free transmissions at $BER=10^{-9}$ for downstream and upstream in either working or protection mode were successfully demonstrated.

5.2 Future work

In chapter 3, we have suggested our future work on multicast enabled optical WDM-PON architecture design. We have successfully overlay two independent multicast data streams onto a typical WDM-PON. Is there any way to overlay more than two independent multicast streams onto one WDM-PON. One possible solution for this is to use same technique in the thesis---subcarrier modulation. However, by analyzing the power budget for downstream traffic in chapter 3, no more than five multicast data stream can be supported without considering about the limited bandwidth resource in a single wavelength channel, which may also limit the spacing between subcarriers. OFDM technique [90] can be promising candidate to solve all these problems by releasing the requirement for power budget and increasing the spectrum efficiency. We may use different subcarriers in an optical OFDM to carrier different multicast data streams. However, a subcarrier tone can only carry low-rate data, and the received need off-line processing, which may limit the transmission and processing speed of the system. Besides, a dynamic control for the multicast traffic may require real-time control of the optical OFDM signals. In the future, we may further investigate the OFDM-based multicast enabled scheme by using several subcarriers to carry one multicast stream in order to raise the transmission speed.

Another possible research work for the future is to design a more flexible architecture for WDM-PONs, which can not only support multicast data transmission but also provide self-protection. Subcarrier modulation technique can be readily used for this purpose, by employing different subcarriers for different function. However, the problem lays in the system complexity and independent control realization. But it is believed an interesting research topic in a WDM-PON.

In nowadays, wireless communication and mobile communication have attracted a lot of attention, since the convenience they bring to one's daily life. However, these transmissions may suffer from fading effect and large loss. Radio-over-fiber [91] system is a kind of integration of wireless and wired techniques, which transmits the radio signals over the optical networks, such as WDM-PON. Optical transmission is a promising way to provide subscribers high speed and long reach services due to the low power loss of fibers, compared to the wireless transmission. Thus the idea of transmitting wireless signal on the wired optical link has attracted much attention recently, which is also known as the radio-over-fiber system (ROF). Radio-over-fiber systems can generate and deliver microwave and millimeter-wave wireless signals through wired optical networks such as PON to many base stations (BSs) that serve a large number of mobile users. Because of the low loss of fiber transmission, the coverage of the whole system is increased and the cost is reduced. In my future research, I plan to further investigate the integration of WDM-PON technology with the wireless technology.

List of Publications

JOURNALS

[1] Yang Qiu, Z.X. Liu, C.K. Chan, "A Centrally Controlled Survivable WDM-PON based on Optical Carrier Suppression Technique," ***IEEE Photonics Technology Letters***, vol. 23, no. 6, pp. 386-388, Mar. 2011.

[2] Yang Qiu, C.K. Chan, "Optical Overlay of Two Independent Multicast Streams on a WDM Passive Optical Network," ***IEEE Photonics Technology Letters***, vol. 22, no. 20, pp. 1536-1538, Oct. 2010.

[3] Yang Qiu, C.K. Chan, "An Optical Multicast Overlay Scheme using Optical Sub-Carriers for WDM Passive Optical Networks," ***IEEE Journal of Selected Areas on Communications***, vol. 28, no. 6, pp. 818-826, Aug. 2010.

[4] Yang Qiu, C.K. Chan, "A WDM Passive Optical Network with Polarization-assisted Multicast Overlay Control," ***IEEE Photonics Technology Letters***, vol. 21, no. 16, pp. 1133 – 1135, Jul. 2009.

[5] Z.X. Liu, Yang Qiu, J. Xu, C.K. Chan, "An Optical Multicast Overlay Scheme for a WDM PON using Inverse-RZ-Duobinary Signals," ***IEEE Photonics Technology Letters***, vol. 23, no. 4, pp. 257-259, Feb. 2011.

CONFERENCES

[1] Yang Qiu, C.K. Chan, "A Simple Centrally Controlled Survivable WDMPON Architecture using Optical Carrier Suppression," ***OptoElectronics and Communications Conference (OECC)***, Paper 6A2-3, Sapporo, Hokkaido, Japan, Jul. 2010.

[2] Yang Qiu, C.K. Chan, "A Novel Multicast Overlay Scheme for WDM Passive Optical Networks using Optical Carrier Suppression Technique," ***European Conference on Optical Communications (ECOC)***, Paper P6.14, Vienna, Austria, 2009.

[3] Yang Qiu, C.K. Chan, "An Optical FSK Transmitter Based on Phase Modulator Embedded Optical Loop Mirror and Optical Carrier Suppression," ***OptoElectronics and Communications Conference (OECC)***, Paper WT1, Hong Kong, 2009.

[4] Yang Qiu, C.K. Chan, "A Simple Multicast Overlay Scheme for WDM Passive Optical Networks with Symmetric Two-Way Traffic," ***OptoElectronics and Communications Conference (OECC)***, Paper WV5, Hong Kong, 2009.

[5] Yang Qiu, C.K. Chan, "A Polarization-assisted Multicast Overlay Scheme for WDM-PONs," ***IEEE European Conference on Lasers and Electro-Optics (CLEO/Europe)***, Paper CI3.5, Munich, Germany, 2009.

[6] Z.X. Liu, J. Xu, Y. Qiu, C.K. Chan, "An 80-km-Reach Centralized-light-source WDM PON utilizing Inverse-RZ-Duobinary Downstream Signals," ***European Conference on Optical Communications (ECOC)***, Paper P6.12, Torino, Italy, Sep. 2010.

[7] Z.X. Liu, Y. Qiu, J. Xu, C.K. Chan, L.K. Chen, "A WDM-PON Optical Multicast Overlay Scheme Using Inverse-RZ-Duobinary Signal," ***IEEE/OSA Optical Fiber Communication Conference / National Fiber Optic Engineers Conference(OFC/NFOEC)***, Paper OThG5, San Diego, California, USA, 2010.

BIBLIOGRAPHY

[1] I. Kaminow and T. Li, "Optical Fiber Telecommunications IVB," San Diego: *Academic Press*, 2002.

[2] "Very high speed digital subscriber line transceivers 2 (VDSL2)," *ITU-T Recommendation G.993.2*, 2006

[3] R. D. Feldman, E. E. Harstead, S. Jiang, T. H. Wood and M. Zirngibl, "An evaluation of architectures incorporating wavelength division multiplexing for broad-band fiber access," *IEEE J. Lightwave Technol.*, Vol. 16, no. 9, pp. 1546-1559, 1998.

[4] G. Kramer and G. Pesavento, "Ethernet Passive Optical Network (EPON): Building a Next-Generation Optical Access Network," *IEEE Communications Magazine*, pp. 66-73, 2000

[5] "Broadband optical access systems based on Passive Optical Network (PON)," *ITU-T Recommendation G.983.1*, 2005

[6] "Ethernet in the first mile," *IEEE Standard 802.3ah*, 2004.

[7] "Gigabit-capable Passive Optical Networks (GPON)," *ITU-T Recommendation G.984.1*, 2003.

[8] G. Kramer, B. Mukherjee, and G. Pesavento, "Interleaved Polling with Adaptive Cycle Time (IPACT): A Dynamic Bandwidth Distribution Scheme in an Optical Access Network," *Photonic Network Communications*, vol. 4, no. 1 pp. 89-107, January 2002.

[9] "10-Gigabit-capable passive optical networks (XG-PON): General requirements," *ITU-T Recommendation G.987.1*, 2010

[10] S. Wagner, H. Kobrinski, T. Robe, H. Lemberg, and L. Smoot, "Experimental demonstration of a passive optical subscriber loop architecture," *IEE Electron. Lett.*, vol, 24, pp.344-346,1988.

[11] S. Wagner and H. Lemberg, "Technology and system issues for the WDM-based fiber loop architecture," *IEEE J. Lightwave Technol.*, vol.7, pp.1759-1768, 1989.

[12] C. K. Chan, L. K. Chen, and C. L. Lin, "WDM PON for next-generation optical broadband access networks," *OptoElectronics and Communications Conference (OECC),* Paper 5E2-1 (Invited), Kaohsiung, Taiwan, Jul. 2006.

[13] C. Dragone, C. A. Edwards, and R. C. Kistler, "Integrated optics $N \times N$ multiplexer on silicon," *IEEE Photon. Technol. Lett.*, vol. 4, pp.896-899, 1991.

[14] H. Shinohara, "Broadband expansion in Japan," *Technical Digest of IEEE/OSA Optical Fiber Communication Conference*, Plenary talk, Anaheim, 2005.

[15] V. O'Byrne, "Verizon's fiber to the premises: lessons learned", *IEEE/OSA Optical Fiber Communication Conference / National Fiber Optic Engineers Conference(OFC/NFOEC)*, Paper OWP6, Anaheim, 2005.

[16] C. Lin (ed.), "Broadband Optical Access Networks and Fiber-to-the-Home," *John Wiley and Sons*, U. K., June 2006.

[17] B. Zhang, Chinlon Lin, L. Huo, Z. X. Wang, C. K. Chan, " A simple high-speed WDM PON utilizing a centralized supercontinuum broadband light source for colorless ONUs," *IEEE/OSA Optical Fiber Communication Conference / National Fiber Optic Engineers Conference(OFC/NFOEC)*, Paper OTuC6, Anaheim, California, USA, 2006.

[18] P. J. Winzer and R. Essiambre, " Advanced Modulation Formats for High-Capacity Optical Transport Networks," *IEEE J.Lightwave Technol.*, vol. 24, no. 12, pp. 4711-4728 , 2006

[19] M. Khanal, C. J. Chae, R. S. Tucker, "Selective broadcasting of digital video signals over a WDM passive optical network," *IEEE Photon. Technol. Lett.*, vol. 17, no. 9, pp. 1992-1994, Sept. 2005.

[20] D. Zhou, S. Subramaniam, "Survivability in Optical Networks," *IEEE Network Magazine*, Vol. 14, No. 6, pp. 16-23, 2000

[21] Wagner, S.S., Lemberg, H.L., Kobrinski, H., Smoot, L.S., Robe, T.J., "A passive photonic loop architecture employing wavelength-division multiplexing," *Proc. Globecom '88*, paper 48.1, 1988.

[22] Wagner, S.S., Lemberg, H.L., "Technology and system issues for the WDM-based fiber loop architecture", *IEEE J. Lightwave Technol.*, vol. 7, no. 11, 1759-1768, 1989

[23] R. D. Feldman, E. E. Harstead, S. Jiang, T. H. Wood, M. Zirngibl, "An evaluation of architectures incorporating wavelength division multiplexing for broad-band fiber access," *IEEE J. Lightwave Technol.*, vol. 16, no. 9, pp. 1546-1559, 1998.

[24] C.R. Giles, R.D. Feldman, T.H. Wood, M. Zirngib, G. Raybon, T. Strasser, L. Stulz; A. McCormick, C.H. Joyner, C.R. Doerr, "Access PON using downstream 1550-nm WDM routing and upstream 1300-nm SCMA combining through a fiber-grating router", *IEEE Photon. Technol. Lett.*, vol. 8, no. 11, pp. 1549-1551, 1996.

[25] M. Zirngibl, C. H. Joyner, L.W. Stulz, C. Dragone, H. M. Presby, and I. P. Kaminow, "LARNET, a local access router network," *IEEE Photon. Technol. Lett.*, vol. 7, no. 2, pp. 215–217, 1995.

[26] N. J. Frigo, P. D. Magill, T. E. Darcie, P. P. Iannone, M. M. Downs, B. N. Desai, U. Koren, T. L. Koch, C. Dragone, and H. M. Presby, "RITENet: a passive optical network architecture based on the remote interrogation of terminal equipment," *IEEE/OSA Optical Fiber Communication Conference / National Fiber Optic Engineers Conference (OFC/NFOEC)*, Paper PD8, San Jose, California, USA, 1994.

[27] J. Kani, M. Teshima, K. Akimoto, N. Takachio, S. Suzuki, K. Iwatsuki, and M. Ishii,"A WDM based optical access network for wide-area gigabit access services," *IEEE Opt. Commun. Mag.* 41, S43–S48, 2003.

[28] G. Maier, M. Martinelli, A. Pattavina, and E. Salvadori, "Design and cost performance of the multistage WDM PON access networks," *IEEE J. Lightwave Technol.*, vol. 18, no. 2, pp. 125-143, 2000.

[29] Iannone, P.P., Reichmann, K.C., Smiljanic, A., Frigo, N.J., Gnauck, A.H., Spiekman, L.H., Derosier, R.M., "A transparent WDM network featuring shared virtual rings", *IEEE J. Lightwave Technol.*, vol. 18, no. 12, pp. 1955-1963, 2000.

[30] F.T. An, K.S. Kim, D. Gutierrez, S. Yam, E. Hu, K. Shrikhande, L.G. Kazovsky, "SUCCESS: a next-generation hybrid WDM/TDM optical access network architecture", *IEEE J. Lightwave Technol.*, Vol. 22 , No. 11 , pp. 2557-2569, Nov. 2004.

[31] E. Biorlin, B. Riou, P. Abraham, J. Piprek, Y. Chiu, A. Black, and J. Bowers, "Vertical-cavity semiconductor optical amplifiers," *in Proc. Lasers and Electro-Optics Soc. 2000 Annual Meeting*, vol. 2, Nov. 2000, pp. 573–574.

[32] S. Calvez et al., "1.3 m GaInNA's optically-pumped vertical cavity semiconductor optical amplifier," *IEE Electron. Lett.*, vol. 39, pp. 100–102, Jan. 2003.

[33] H. Suzuki, M. Fujiwara, T. Suzuki, N. Yoshimoto, H. Kimura, and M. Tsubokawa, "Wavelength-tunable DWDM-SFP transceiver with a signal monitoring interface and its application to coexistence-type colorless WDM-PON," *European Conference on Optical Communications (ECOC)*, Berlin, Germany, Post-deadline paper PD3.4, 2007.

[34] J. Kani and K. Iwatsuki, "A wavelength-tunable optical transmitter using semiconductor optical amplifiers and an optical tunable filter for metro/access DWDM applications," *IEEE J. Lightwave Technol.*, vol. 23, no. 3, pp. 1164–1169, Mar. 2005.

[35] M. Zirngibl, C. R. Doerr, and L. W. Stulz, "Study of spectral slicing for local access applications," *IEEE Photon. Tech. Lett.*, vol. 8, pp. 721–723, 1996.

[36] D. K. Jung, S. K. Shin, C. –H. Lee, and Y. C. Chung, "Wavelength-division-multiplexed passive optical network based on spectrum-slicing techniques," *IEEE Photon. Tech. Lett.*, vol. 10, no. 9, pp. 1334-1336, 1998.

[37] S. L. Woodward, P. P. Iannone, K. C. Reichmann, and N. J. Frigo, "A spectrally sliced PON employing Fabry-Perot Lasers," *IEEE Photon. Tech. Lett.*, vol. 10, no. 9, pp. 1337-1339, 1998.

[38] D. J. Shin, Y. C. Yeh, J. W. Kwon, E. H. Lee, J. K. Lee, M. K. Park, J. W. Park, Y. K. Oh, S. W. Kim, I. K. Yun, H. C. Shin, D. Heo, J. S. Lee, H. S. Shin, H. S. Kim, S. B. Park, D. K. Jung, S. T. Hwang, Y. J. Oh, and C. S. Shim, " Low-cost WDM-PON with colorless bi-directional transceivers," *IEEE J. Lightwave Technol.*, vol. 24, no. 1, pp 158-165, Jan. 2006.

[39] K. M. Choi, C. H. Lee, "Colorless operation of WDM-PON based on wavelength locked Fabry-Perot laser diode," *European Conference on Optical Communications (ECOC)*, Paper We3.3.4, Glasgow, UK, 2005.

[40] P. Healy, P. Townsend, C. Ford, L. Johnston, P. Townley, I. Lealman, L. Rivers, S. Perrin, R. Moore, "Spectral slicing WDM-PON using wavelength-seeded reflective SOAs," *IEE Electron. Lett.*, vol. 37, no. 19, pp1181-1182, 2001.

[41] S. J. Park, G. Y. Kim, T. Park, E. H. Choi, et al., "WDM-PON system based on the laser light injected reflective semiconductor optical amplifier," *European Conference on Optical Communications (ECOC)*, Paper We3.3.6, Glasgow, UK, 2005.

[42] C. Arellano, C. Bock, and J. Prat, "RSOA-based optical network units for WDM-PON," *IEEE/OSA Optical Fiber Communication Conference / National Fiber Optic Engineers Conference (OFC/NFOEC)*, Paper OTuC1, Anaheim, California, USA, 2006.

[43] E. Wong, K. L. Lee, T. Anderson, "Directly modulated self-seeding reflective SOAs as colorless transmitters for WDM passive optical networks," *IEEE/OSA Optical Fiber Communication Conference / National Fiber Optic Engineers Conference (OFC/NFOEC)*, Paper PDP49, Anaheim, California, USA, 2006.

[44] E. Wong, X. Zhao, C. J. Chang-Hasnain, W. Hoffman, M. C. Amann, "Uncooled, optical injection-locked 1.55μm VCSELs for upstream

transmitters in WDM-PONs," *IEEE/OSA Optical Fiber Communication Conference / National Fiber Optic Engineers Conference (OFC/NFOEC)*, Paper PDP50, Anaheim, California, USA, 2006.

[45] C. W. Chow, "Wavelength Remodulation Using DPSK Down-and-Upstream With High Extinction Ratio for 10-Gb/s DWDM-Passive Optical Networks," *IEEE Photon. Tech. Lett.*, vol. 20, no. 1, pp. 12-14, Jan. 2008.

[46] W. Hung, C. K. Chan, L. K. Chen, F. Tong, "An optical network unit for WDM access networks with downstream DPSK and upstream re-modulated OOK data using injection-locked FP laser," *IEEE Photon. Tech. Lett.*, vol. 15, no. 10, pp. 1476-1478, Oct. 2003.

[47] N. Deng, C. K. Chan, L. K. Chen, F. Tong, "Data re-modulation on downstream OFSK signal for upstream transmission in WDM a passive optical network," *IEE Electron. Lett.*, vol. 39, no. 24, pp. 1741-1742, Nov. 2003.

[48] G. W. Lu, N. Deng, C. K. Chan, L. K. Chen, "Use of downstream inverse-RZ signal for upstream data re-modulation in a WDM passive optical network," *IEEE/OSA Optical Fiber Communication Conference / National Fiber Optic Engineers Conference (OFC/NFOEC)*, Paper OFI8, Anaheim, California, USA, Mar. 2005.

[49] L. Xu and H. K. Tsang, "Differential Phase Shift Keying for Asynchronous Upstream Remodulation of Dark Return-to-Zero Downstream Channel" *IEEE/OSA Optical Fiber Communication Conference / National Fiber Optic Engineers Conference (OFC/NFOEC)*, Paper OWH6, San Diego, USA, 2008.

[50] Oguchi, K., Okada, K., Terada, S., Tojo, K., "New Optical VPN Configuration using Wavelength Routers in a WDM-Passive Optical Network", *International Conference on Computer Communications and Networks (ICCCN)*, pp 234 - 239 , Aug. 2007

[51] Q.G. ZHAO, C.K. Chan, "Virtual Private Group Formation in a WDM Passive Optical Network", *Opto-Electronics and Communications Conference (OECC)*, Paper 10A2-3, Yokohama, Japan, Jul. 2007

[52] Q.G. ZHAO, C.K. Chan, "A Wavelength Division Multiplexed Passive Optical Network with Flexible Optical Network Unit Internetworking Capability", *IEEE OSA Journal of Lightwave Technology*, vol. 25, no. 8, pp. 1970-1977, Aug. 2007.

[53] Q. G. Zhao, X. F. Sun, Y. C. Ku, C. K. Chan, and L. K. Chen, "A novel internetworking scheme for WDM passive optical network based on remodulation technique," *IEEE/OSA Optical Fiber Communication Conference / National Fiber Optic Engineers Conference (OFC/NFOEC)*, Paper JThB67,Anaheim, CA, Mar. 2006,.

[54] T. Jayasinghe et al., "Wavelength switchable ONU transmitter using a self-seeded RSOA for reconfigurable optical VPN over WDM PON," *Opto-Electronics and Communications Conference (OECC)*, ThL2, 2008.

[55] Yue Tian, Yikai Su, Lilin Yi, Lufeng Leng, Xiangqing Tian, Hao He, Xinyu Xu, Optical VPN in PON based on dpsk erasing/rewriting and DPSK/IM formatting using a single Mach–Zehnder modulator, *European Conference on Optical Communications (ECOC)*, Tu4.5.6, 2008,

[56] Yanzhi Wu, Tong Ye, Liang Zhang, Xiaofeng Hu, Xinwan Li, Yikai Su, "A cost-effective WDM-PON architecture simultaneously supporting wired, wireless and optical VPN services", *Optics Communications*, vol. 284, no. 5, pp. 1139-1145, 2010

[57] Carlos Bock and Josep Prat , "WDM/TDM PON experiments using the AWG free spectral range periodicity to transmit unicast and multicast data," *OSA Opt. Express*, vol. 13, no. 8, pp. 2887-2891, April. 2005.

[58] M. Khanal, C. J. Chae, R. S. Tucker, "Selective broadcasting of digital video signals over a WDM passive optical network," *IEEE Photon. Technol. Lett.*, vol. 17, no. 9, pp. 1992-1994, Sept. 2005.

[59] Q. J. Chang, J. M. Gao, Q. Li, Y. K. Su, "Simultaneous transmission of point-to-point data and selective delivery of video services in a WDM-PON Using ASK/SCM Modulation Format," *IEEE/OSA Optical Fiber*

Communication Conference / National Fiber Optic Engineers Conference (OFC/NFOEC), Paper OWH2, San Diego, California, USA, 2008.

[60] Y. Tian, Q. J. Chang, Y. K. Su, "A WDM passive optical network enabling multicasting with color-free ONUs," *OSA Opt. Express*, vol. 16, no. 14, pp. 10434-10439, Jul. 2008.

[61] N. Deng, C. K. Chan, L. K. Chen, and C. Lin, "A WDM passive optical network with centralized light sources and multicast overlay," *IEEE Photon. Technol. Lett.*, vol. 20, no. 2, pp. 114–116, Jan. 2008.

[62] L. Cai, Z. Liu, S, Xiao, M. Zhu, R. Li and W. Hu, "Video-service-overlaid wavelength-division-multiplexed passive optical network," *IEEE Photon. Technol. Lett.*, vol. 21, no. 14, pp. 990-992, 2009.

[63] Y. Zhang, N. Deng, C. K. Chan, and L. K. Chen, "A multicast WDM-PON architecture using DPSK/NRZ orthogonal modulation," *IEEE Photon. Technol. Lett.*, vol. 20, no. 17, pp. 1479-1481, 2008.

[64] T. J. Chan, C. K. Chan, L. K. Chen, and F. Tong, "A self-protected architecture for wavelength division multiplexed passive optical networks," *IEEE Photon. Technol. Lett.*, vol. 15, no. 11, pp. 1660–1662, Nov. 2003.

[65] C.M. Lee, T.J. Chan, C.K. Chan, L.K. Chen, C.L. Lin; "A Group Proteetion Architecture (GPA) for Traffic Restoration in Multi-wavelength Passive Optical Networks," *European Conference on Optical Communications (ECOC)*, Paper Th2.4.2, Rimini, Italy, Sept, 2003.

[66] Z.X. Wang, B. Zhang, C.L. Lin, C.K. Chan; "A Broadcast and Select WDM-PON and its Protection," *European Conference on Optical Communications (ECOC)*, Paper We4.P.24, Glasgow, United Kingdom, Sep. 2005.

[67] Z. X. Wang, X. F. Sun, C. Lin, C. K Chan, and L. K. Chen, "A novel centrally controlled protection scheme for traffic restoration in WDM passive optical networks," *IEEE Photon. Technol. Lett.*, vol. 17, no. 3, pp. 717–719, Mar. 2005.

[68] X.F. Sun, C.K. Chan, L.K. Chen; "A Survivable WDM PON Architecture with Centralized Alternate-Path Protection Switching for Traffic Restoration," *IEEE Photon. Technol. Lett.*, vol. 18, no. 4, pp.631-633, Feb. 2006.

[69] E. S. Son, K. H. Han, J. H. Lee, and Y. C. Chung, "Survivable network architectures for WDM PON", *IEEE/OSA Optical Fiber Communication Conference / National Fiber Optic Engineers Conference (OFC/NFOEC)*, Paper OFI4, Anaheim, California, USA, 2005.

[70] K. Lee, S. G. Mun, C. H. Lee, and S. B. Lee, "Reliable Wavelength-Division-Multiplexed Passive Optical Network Using Novel Protection Scheme," *IEEE Photon. Technol. Lett.*, vol. 20, no. 9, pp.679-681, May. 2008.

[71] Arshad Chowdhury, M. –F. Huang, H. –C. Chien, Georgios Ellinas, and G. –K. Chang, "A Self-Survivable WDM-PON Architecture with Centralized Wavelength Monitoring, Protection and Restoration for both Upstream and Downstream Links," *IEEE/OSA Optical Fiber Communication Conference / National Fiber Optic Engineers Conference (OFC/NFOEC)*, San Diego, , Paper JThA95, 2008.

[72] B. Glance, C. R. Doerr, I. P. Kaminow, and R. Montagne, "Optically restorable WDM ring networks using simple add/drop circuitry," *IEEE J. Lightwave Technol.*, vol. 14, no. 11, pp. 2453-2456, 1996.

[73] C. H. Kim, C.-H. Lee, and Y. C. Chung, "Bidirectional WDM self-healing ring network based on simple bidirectional add/drop amplifier modules," *IEEE Photon. Technol. Lett.*, vol. 10, pp. 1340-1342, Sept.1998.

[74] Y. H. Joo, G. W. Lee, R. K. Kim, S. H. Park, K. W. Song, J. Koh, S. T. Hwang, Y. Oh, and C. Shim, "1-fiber WDM self-healing ring with bidirectional optical add/drop multiplexers," *IEEE Photon. Technol. Lett.*, vol. 16, pp. 683-685, Feb. 2004.

[75] S. B. Park, C. H. Lee, S. G. Kang, and S. B. Lee, "Bidirectional WDM self-healing ring network for hub/remote nodes," *IEEE Photon. Technol. Lett.*, vol. 15, pp. 1657-1659, Nov. 2003.

[76] Z.X. Wang, C.L. Lin, C.K. Chan; "Demonstration of a Single-Fiber Self-Healing CWDM Metro Access Ring Network with Uni-directional OADM," *IEEE Photon. Technol. Lett.*, vol. 18, no. 1, pp. 163-165, Jan. 2006.

[77] X. F. Sun, C.K. Chan, Z.X. Wang, C.L. Lin, L.K. Chen; "A Single-Fiber Bi-directional WDM Self-Healing Ring Network with Bi-directional OADM for Metro-Access Applications," *IEEE Journal of Selected Areas on Communications*, vol. 25, no. 4, pp. 18-24, Apr. 2007.

[78] C. J. Chae and R. S. Tucker, "A protected optical star-shaped ring network using an N×N arrayed waveguide grating and incoherent light sources," *IEEE Photon. Technol. Lett.*, vol. 13, no. 8, pp. 878–880, Aug. 2001.

[79] C. J. Chae, "A Flexible and Protected Virtual Optical Ring Network," *IEEE Photon. Technol. Lett.*, vol. 14, no. 11, pp. 1626-1628, 2002.

[80] P. P. Iannone, K. C. Reichmann, and N. J. Frigo, "Broadcast digital video delivered over WDM passive optical networks," IEEE Photon. Technol. Lett., vol. 8, no. 7, pp. 930–932, Jul. 1996.

[81] O. Akanbi, J. Yu and G. K. Chang, "A new scheme for bidirectional WDM-PON using upstream and downstream channels generated by optical carrier suppression and separation technique," *IEEE Photonics Technol. Lett.*, vol. 18, no. 2, pp. 340–342, 2006.

[82] John O'Reilly and Phil Lane, "Remote Delivery of Video Services Using mm-Waves and Optics,", *IEEE J.Lightwave Technol.*, vol. 12, no. 2, pp. 369–375, 1994.

[83] M. Ohm and J. Speidel, "Quaternary optical ASK-DPSK and receivers with direct detection," *IEEE Photon. Technol. Lett.*, vol. 15, no. 1, pp. 159–161, Jan. 2003

[84] W. Shieh, H. Bao, and Y. Tang, "Coherent optical OFDM: theory and design," *OSA Opt. Express*, vol. 16, no. 2, pp. 841-859, January. 2008.

[85] T. H. Wu, ''Emerging technologies for fiber network survivability,'' *IEEE Communication Magazine*, vol.33, no.2, pp62–74, Feb., 1995.

[86] D. Colle, S. De Maesschalck, C. Develder, P. Van Heuven, A. Groebbens, J. Cheyns, I. Lievens, M. Pickavet, P. Lagasse, and P. Demeester, ''Data-centric optical networks and their survivability,'' *IEEE Journal on Selected Areas in Communications*, vol.20, no.1, pp6–20, 2002.

[87] A. F. Elrefaie, "Multiwavelength survivable ring network architectures," *ICC '93*, vol. 2, pp. 1245-1251, Geneva. May 1993.

[88] N. Deng, C. K. Chan, and L. K. Chen, "A centralized-light-source WDM access network utilizing inverse-RZ downstream signal with upstream data remodulation," *Opt. Fiber Technol.*, vol. 13, no. 1, pp. 18–21, Jan. 2007.

[89] Carlos Bock, Josep Prat, and Stuart D. Walker, "Hybrid WDM/TDM PON using the AWG FSR and featuring Centralized Light Generation and Dynamic Bandwidth Allocation", *IEEE J.Lightwave Technol.*, Vol. 23 , No. 12 , pp. 3981-3988, Nov. 2005.

[90] Jean Armstrong, "OFDM for Optical Communications", *IEEE J.Lightwave Technol.,* vol. 27, no. 3, 189-203, 2009

[91] D. Wake, M. Webster, G. Wimpenny, K. Beacham, and L. Crawford, " Radio over fiber for mobile communications," *IEEE Int. Topical Meeting Microwave Photonics (MWP)*, Oct. 4–6, 2004, pp. 157–160, 2004